APPENDIX A

GEOTECHNICAL INVESTIGATION REPORT

Quality Engineering | Valued Relationships

Associated Engineering

Russell Water Treatment Plant Geotechnical Investigation Report

Prepared for:

Mr. Ken Anderson, P.Eng.
Manager, Water
Associated Engineering
200 - Number Five Donald Street
Winnipeg, MB R3L 2T4

Project Number:
0115 015 00

Date:
November 29, 2016

www.trekgeotechnical.ca
1712 St. James Street | Winnipeg, Manitoba R3H 0L3 | Tel 1.204.975.9433 | Fax 1.204.975.9435

Quality Engineering | Valued Relationships

November 29, 2016

Our File No. 00115 015 00

Mr. Ken Anderson, P.Eng.
Manager, Water
Associated Engineering
200 - Number Five Donald Street
Winnipeg, MB
R3L 2T4

RE: Russell Water Treatment Plant (Russell, MB)
Geotechnical Investigation Report

TREK Geotechnical Inc. is pleased to submit our Geotechnical Investigation Report for the above noted project located in the Russell Manitoba.

Please contact the undersigned at our office if you have any questions. Thank you for the opportunity to work with you on this assignment.

Sincerely,

TREK Geotechnical Inc.
Per:

Nelson John Ferreira, Ph.D., P.Eng.
Principal
Tel: 204.975.9433

Revision History

Revision No.	Author	Issue Date	Description
0	RJvR	November 29, 2016	Final Report

Authorization Signatures

Prepared By:

Reinhardt Van Rensburg, EIT
Geotechnical Engineer-In-Training

PROVINCE OF MANITOBA
N. J. FERREIRA
Member
22892
REGISTERED PROFESSIONAL ENGINEER

Reviewed By:

Nelson John Ferreira, Ph.D., P.Eng.
Senior Geotechnical Engineer

APEGM
Certificate of Authorization
Trek Geotechnical Inc.
No. 4877 Date: Nov. 29, 2016

Table of Contents

Letter of Transmittal

Revision History and Authorization Signatures

1.0 Introduction 1

2.0 Background Information 1

3.0 Field Program 1

3.1 Subsurface Investigation 1

3.2 Subsurface Conditions 2

4.0 Foundation Recommendations 3

4.1 Limit States Design 3

4.2 Below Grade Raft Foundation 4

4.3 Ad-freezing Effects 4

4.4 Foundation Concrete 5

4.5 Foundation Inspection Requirements 5

4.6 Lateral Earth Pressures 5

5.0 Excavations 6

6.0 Site Drainage 7

7.0 Closure 7

Figure

Test Hole Logs

Appendices

List of Tables

Table 1 ULS Resistance Factor for Shallow Foundations (NBCC 2010) 4

List of Figures

Figure 01 Test Hole Location Plan

List of Appendices

Appendix A Laboratory Testing Results

1.0 Introduction

This report summarizes the results of the geotechnical investigation completed by TREK Geotechnical Inc. (TREK) for the proposed new water treatment plant (WTP) in the town of Russell, MB. The terms of reference for the investigation are included in our proposal addressed to Ken Anderson of Associated Engineering (Associated) dated September 8, 2016. The current scope of work includes a subsurface investigation, laboratory testing, and the provision of recommendations for the design and construction of foundations. Recommendations for lateral earth pressures for permanent walls, excavations and shoring, backfill, site drainage considerations, foundation concrete, quality control materials testing and inspection services are also included.

2.0 Background Information

The project site is located along the west side of Ellice Ave. N between Darcy St. and Augusta St. The existing brick WTP building and existing reservoir are situated on the south end of the site (on the corner of Darcy Str. and Ellice Ave.) and the new proposed WTP with a below ground reservoir is to be constructed north of the existing water treatment building. The new WTP building will be roughly 20 m wide by 23 m long and will likely be founded on a concrete raft foundation at a depth of approximately 3.2 m below existing grade.

3.0 Field Program

3.1 Subsurface Investigation

A subsurface investigation was undertaken on October 4th, 2016 under the supervision of TREK personnel to evaluate the subsurface conditions at the site. Four test holes (TH16-01 to 04) were drilled within the vicinity of the new building for the provision of foundation recommendations. The test holes were drilled to power auger refusal at depths ranging from 4.9 to 6.4 m in all test holes. The test holes were drilled using an Acker SSIII track-mounted drill rig equipped with 125 mm solid stem augers and backfilled using auger cuttings. A standpipe piezometer, SP16-01 was installed in a separate hole adjacent to TH16-01.

Subsurface soils encountered during drilling were visually classified based on the Unified Soil Classification System (USCS). Disturbed auger cuttings and split spoon samples collected during drilling were transported to TREK's testing laboratory in Winnipeg, MB for further classification and laboratory testing. Laboratory testing consisted of water content determination on all samples and Atterberg limit and hydrometer testing on select samples. Water soluble sulphate tests were done by ALS Environmental to determine the soluble sulphate in the soil to assist in providing the provision for design of foundation concrete, or any other concrete that will be in contact with the soils at site.

Test hole locations (shown on Figure 01) were determined by handheld GPS and measured from stakes in ground that were assumed to denote the corners of new water treatment plant. Test hole elevations were surveyed using a rod and level relative to the top of the southeast corner of the concrete pad

located at the existing reservoir (denoted as TBM 1 on Figure 01), which was assigned an arbitrary elevation of 100.0 m. The test hole logs attached to this report include a description of the soil units encountered during drilling and other pertinent information such as groundwater conditions and a summary of the laboratory testing results.

3.2 Subsurface Conditions

3.2.1 Soil Stratigraphy

A brief description of the soil units encountered at the test hole locations are provided below. All interpretations of soil stratigraphy for the purposes of design should refer to the detailed information provided on the attached test hole logs.

The soil stratigraphy at the site generally consists of (in descending order):

- Fill
- Clay and Silt Till
- Sand and Silt
- Clay Till
- Clay Shale

The fill consists of varying amounts of clay, silt, sand and gravel and ranges in thickness between 0.8 to 1.3 m. Clay and silt till was encountered below the fill and contains varying amounts of clay, silt, sand and gravel. Layers of silt and sand were encountered at various depths within or above the till at three of the four test hole locations. The clay and silt till layers are generally brown of colour, moist, stiff to very stiff and is of intermediate to high plasticity. Soil-like silty clay shale was encountered at depths of 4.3 to 4.6 m which extended to the depth of exploration (power auger refusal) in all test holes. The clay shale is, non-cemented ("soil-like"), grey, moist, hard, and is of high plasticity. A ~25 mm thick sand seam was encountered in the clay shale at 4.9 m in TH16-01 from which seepage was observed.

3.2.2 Seepage, Sloughing, and Groundwater conditions

Seepage was encountered in three of the four test holes while sloughing occurred in two of the four test holes. Seepage and sloughing was not observed in TH16-04. Seepage tended to occur within the sand and silt layers or thin sand seams (TH16-01, TH16-02 and TH16-03) while sloughing occurred within the fill (TH16-03) or within sand layers (TH16-02).

Ground water levels were measured upon completion of drilling and ranged between 0.9 m depth (TH16-02) to 5.2 m depth (TH16-01). A standpipe piezometer was installed in TH16-01 at ~6.0 m depth to determine groundwater levels in the clay shale. The ground water level in the standpipe piezometer was measured at 1.62 m below ground surface (~Elev. 98.12 m) by WTP personnel on November 14th, 2016.

The groundwater observations made during drilling are short-term and should not be considered

reflective of (static) groundwater levels at the site which would require monitoring over an extended period of time to determine. It is important to recognize that groundwater conditions may vary seasonally, annually, or as a result of construction activities.

4.0 Foundation Recommendations

Based on the subsurface conditions and the anticipated magnitude of applied loading from the structures, a raft foundation will likely be the most suitable foundation type for this site. Limit states design and construction recommendations in accordance with the National Building Code of Canada (NBCC 2010) for these foundation types are provided below.

It should be understood that shallow foundations are subject to vertical movements due to seasonal moisture and volume changes and freeze/thaw cycles (*i.e.* frost action) of the underlying clayey soils. In regard to frost action, the depth of frost penetration is approximately 2.5 m below existing ground surface. In this regard, if shallow foundations are to be installed within the frost zone, insulation should be considered or surrounding grades should be raised to provide an equivalent frost depth of 2.5 m.

Given the relatively high groundwater level at the site and the nature of the soils that will be encountered during excavation, dewatering of the excavation for the raft foundation will likely be required. Dewatering will likely require that a series of wells or wellpoints be installed around the proposed excavation area. The wells or wellpoints will need to be pumped until groundwater levels within the work area are lowered to below the design excavation depth.

4.1 Limit States Design

Limit States Design recommendations for shallow foundations in accordance with the National Building Code of Canada (NBCC 2010) are provided below. Limit States Design requires consideration of distinct loading scenarios comparing the structural loads to the foundation bearing capacity using resistance and load factors that are based on reliability criteria. Two general design scenarios are evaluated corresponding to the serviceability and ultimate capacity requirements.

The **Ultimate Limit State (ULS)** is concerned with ensuring that the maximum structural loads do not exceed the nominal (ultimate) capacity of the foundation units. The ULS foundation bearing capacity is obtained by multiplying the nominal (ultimate) bearing capacity by a resistance factor (reduction factor), which is then compared to the factored (increased) structural loads. The ULS bearing capacity must be greater than or equal to the maximum factored load. Table 1 summarizes the resistance factors that can be used for the design of shallow foundations as per the National Building Code of Canada (NBCC 2010). The values of the resistance factors depend on the method of analysis and verification testing completed during construction.

The **Service Limit State (SLS)** is concerned with limiting deformation or settlement of the foundation under service loading conditions such that the integrity of the structure will not be impacted. The SLS should generally be analysed by calculating the settlement resulting from applied service loads and comparing this to the settlement tolerance of the structure. However, the settlement tolerance of the structure is typically not defined at the preliminary design stage. As such, SLS bearing capacities are

often provided that are developed on the basis of limiting settlement to 25 mm or less. A more detailed settlement analysis should be conducted to refine the estimated settlement and/or adjust the SLS bearing resistances if a more stringent settlement tolerance is required.

Table 1. ULS Resistance Factor for Shallow Foundations (NBCC 2010)

Case	Resistance Factor
Shallow Foundations Bearing Resistance	0.5

4.2 Below Grade Raft Foundation

A raft foundation bearing on clay tills will be subject to some seasonal movement associated with moisture changes in clay soils. Provided that this is acceptable the raft foundation installed at 3.2 m depth can be designed using a SLS bearing resistance of 200 kPa and an ULS bearing resistance of 300 kPa These resistances are based on the foundation bearing on very stiff to hard clay till. Additional recommendations for design and construction of the raft are provided below.

Additional considerations for the design and construction of the raft foundation are provided below.

1. Organics, fill soils, silts, clays and any other deleterious materials should be stripped away such that the subgrade only consists of native, undisturbed very stiff clay till. Excavation should be completed by an excavator equipped with a smooth bladed bucket in a manner which minimizes disturbance to the exposed subgrade. Care should be taken not to over-excavate and to minimize the subgrade disturbance at all times. A raft placed on a disturbed bearing surface will result in a reduction in SLS resistance and may lead to intolerable settlement over time.
2. If over-excavation occurs the grades should be raised using Manitoba Infrastructure Class A granular base course compacted to 98% of Standard Proctor Maximum Dry Density (SPMDD).
3. The final bearing surface should be inspected and documented by TREK Geotechnical prior to concrete placement to verify the adequacy of the bearing surface and proper installation of the raft.
4. Utility lines connecting to the expansion (e.g. a line passing through a wall of the expansion) should be designed to accommodate differential movements.
5. The bearing surface should be protected from freezing, drying, or inundation with water at all times during construction. If any of these conditions occur, the sub-grade should be scarified, moisture conditioned as appropriate, and re-compacted to a minimum of 95% of the SPMDD.
6. The raft should be designed by a qualified structural engineer to resist all applied loads from the proposed structures and uplift due to the high groundwater table.

4.3 Ad-freezing Effects

Buried concrete structures can be subject to ad-freezing forces acting along their vertical surfaces. For foundation components located within the depth of frost penetration, an uplift adhesion of 65 kPa is recommended for design. These forces will be resisted by structural dead loads (unfactored) and uplift

resistance afforded by the length of the foundations system below the depth of frost penetration. A frost penetration depth of 2.5 m should be assumed for design. Based on the anticipated depth of the raft foundation (3.2 m) the anticipated frost penetration depth should not be a concern.

4.4 Foundation Concrete

All foundation concrete should be designed by a qualified structural engineer for the anticipated axial (compression and uplift), lateral, and bending loads from the structure and seasonal movements. Based on test results on samples G08 and G26, the degree of exposure for concrete subjected to sulphate attack is classified as moderate according to Table 3, CSA A23.1-14 (Concrete Materials and Methods of Concrete Construction). Accordingly, all concrete in contact with the native soil should be made with sulphate-resistant cement (MS or MSb). Furthermore, concrete which may be exposed to freezing and thawing should be adequately air entrained to improve freeze-thaw durability in accordance with Table 4, CSA A23.1-14.

4.5 Foundation Inspection Requirements

In accordance with Section *4.2.2.3 Field Review* of the NBCC (2010), the designer or other suitably qualified person shall carry out a field review on:

1. a continuous basis during:
    i. the construction of all deep foundation units,
    ii. the installation and removal of retaining structures and related backfilling operations, and
    iii. during the placement of engineered fills.
2. on an as-required basis for the construction of shallow foundation units and in excavating, dewatering and other related works.

In consideration of the above and relative to this particular project, we recommend that TREK, as the geotechnical engineer of record, be retained to inspect the installation of the raft foundation. TREK is familiar with the geotechnical conditions and the basis for the foundation recommendations and can provide any design modifications deemed to be necessary should altered subsurface conditions be encountered.

4.6 Lateral Earth Pressures

The magnitude of lateral earth pressures from retained soil against the component walls will depend on the backfill material type, methods of placing and compacting the backfill, and the magnitude of horizontal deflection of the wall after the backfill is placed. It is recommended that free draining granular fill be used as backfill against the structure walls to improve drainage properties and minimize the potential of lateral frost heave loading. Given that the bottom of the excavation is expected to be below the water table, a sub-drainage system is not recommended, rather the expansion walls should be design to withstand a hydrostatic water pressure at ground surface in addition to the lateral earth pressure.

Cohesive soils should not be used as backfill against the walls as these soils could generate excessive lateral earth pressures from swelling.

An at-rest earth pressure coefficient (K_o) of 0.5 should be used for structural design of the structure walls. An appropriate surface surcharge should be included in the earth pressure distribution to account for surface loads.

4.6.1 Compaction

Over-compaction of the backfill soils adjacent to the WTP walls may result in earth pressures that are considerably higher that those predicted in design. Compaction of the granular fills within about 1.5 m of any wall should be conducted with a light hand operated vibrating plate compactor and the number of compaction passes should be limited. A maximum compacted density of 92% of Standard Proctor Maximum Dry Density (SPMDD) should be reviewed during construction to verify that they are consisted with the design assumptions.

Beyond 1.5m from component walls, excavations should be backfilled with granular fill that is free of debris, organics and any other deleterious materials. The fill should be compacted to 98% of the Standard Proctor Maximum Dry Density (SPMDD) in lift thicknesses not exceeding 150 mm. Even with this level of compaction some settlement of the fill should be expected; the settlement could be in the order of approximately 1 to 2% of the fill thickness.

5.0 Excavations

All excavations must be carried out in compliance with the appropriate regulation(s) under the Manitoba Workplace Safety and Health Act. Any open-cut excavations greater than 3 m deep must be designed and sealed by a professional engineer and should be reviewed by the geotechnical engineer of record (TREK). TREK anticipates that short term stability can be maintained for open-cut excavations shallower than 3 m with side slopes no steeper than 1 horizontal to 1 vertical (1H:1V). Should this not be the case, or if existing (adjacent) structures or infrastructure prevent an open excavation, TREK can provide recommendations and design parameters for shoring systems upon request. Excavations must be designed to prevent undermining of existing foundations and to accommodate construction of the reservoir in a safe manner. Once a final foundation plan is developed, TREK should be contacted to review the plan.

Maintaining the stability of the excavation slopes for the duration of construction should be the responsibility of the Contractor. To prevent wetting or drying of the exposed excavation side slopes, they should be protected with plastic covering or similar measures. Stockpiles of excavated material and heavy equipment should be kept away from the edge of the excavation by a distance equal to or greater than the depth of excavation.

Dewatering measures should be completed as necessary to maintain a dry excavation and permit proper completion of the work. If seepage is encountered, it should be directed to a sump pit and pumped out of the excavation. If significant seepage is observed during excavation, wellpoints should be installed to dewater the excavation for the new WTP. Surface water should be diverted away from the excavation

and the excavation should be backfilled as soon as possible following construction. A dewatering plan should be prepared by the contractor and submitted for review by TREK prior to work proceeding on-site.

6.0 Site Drainage

Drainage adjacent to buildings should promote runoff away from the structures. Water discharge from roof leaders should be directed away from the structures and positive site drainage around the perimeter of the structures should be provided at a gradient of at least 2% to promote runoff away from the structures.

7.0 Closure

The geotechnical information provided in this report is in accordance with current engineering principles and practices (Standard of Practice). The findings of this report were based on information provided (field investigation and laboratory testing). Soil conditions are natural deposits that can be highly variable across a site. If subsurface conditions are different than the conditions previously encountered on-site or those presented here, we should be notified to adjust our findings if necessary.

All information provided in this report is subject to our standard terms and conditions for engineering services, a copy of which is provided to each of our clients with the original scope of work or standard engineering services agreement. If these conditions are not attached, and you are not already in possession of such terms and conditions, contact our office and you will be promptly provided with a copy.

This report has been prepared by TREK Geotechnical Inc. (the Consultant) for the exclusive use of Associated Engineering (the Client) and their agents for the work product presented in the report. Any findings or recommendations provided in this report are not to be used or relied upon by any third parties, except as agreed to in writing by the Client and Consultant prior to use.

Figure

TREK GEOTECHNICAL

0115 015 00
Associated Engineering
Russell Water Treatment Plant

ANSI full bleed A (11.00 x 8.50 Inches)

FIG 001 2016-10-06 Test Hole Locatoin Plan 0_A_DSN.dwg, 10/11/2016 9:28:58 AM

KEYPLAN
SCALE N.T.S.

0 10 20 30 40 50 m
SCALE = 1 : 1 000 (216 mm x 279 mm)

LEGEND:
- TEST HOLE (TREK, 2016)
- TBM1 (TREK, 2016)
- STAND PIPE (TREK, 2016)

NOTES:
1. IMAGE FROM GOOGLE EARTH JUNE 09, 2016.
2. TBM1 IS SOUTHEAST CORNER OF CONCRETE PAD (EXISTING HOLDING RESERVOIR LID) ASSUMED EL. 100.00m

Figure 01
Test Hole Location Plan

Test Hole Logs

EXPLANATION OF FIELD AND LABORATORY TESTING

GENERAL NOTES

1. Classifications are based on the United Soil Classification System and include consistency, moisture, and color. Field descriptions have been modified to reflect results of laboratory tests where deemed appropriate.
2. Descriptions on these test hole logs apply only at the specific test hole locations and at the time the test holes were drilled. Variability of soil and groundwater conditions may exist between test hole locations.
3. When the following classification terms are used in this report or test hole logs, the primary and secondary soil fractions may be visually estimated.

Major Divisions			USCS Classification	Symbols	Typical Names
Coarse-Grained soils (More than half the material is larger than No. 200 sieve size)	Gravels (More than half of coarse fraction is larger than 4.75 mm)	Clean gravel (Little or no fines)	GW		Well-graded gravels, gravel-sand mixtures, little or no fines
			GP		Poorly-graded gravels, gravel-sand mixtures, little or no fines
		Gravel with fines (Appreciable amount of fines)	GM		Silty gravels, gravel-sand-silt mixtures
			GC		Clayey gravels, gravel-sand-silt mixtures
	Sands (More than half of coarse fraction is smaller than 4.75 mm)	Clean sands (Little or no fines)	SW		Well-graded sands, gravelly sands, little or no fines
			SP		Poorly-graded sands, gravelly sands, little or no fines
		Sands with fines (Appreciable amount of fines)	SM		Silty sands, sand-silt mixtures
			SC		Clayey sands, sand-clay mixtures
Fine-Grained soils (More than half the material is smaller than No. 200 sieve size)	Silts and Clays (Liquid limit less than 50)		ML		Inorganic silts and very fine sands, rock floor, silty or clayey fine sands or clayey silts with slight plasticity
			CL		Inorganic clays of low to medium plasticity, gravelly clays, sandy clays, silty clays, lean clays
			OL		Organic silts and organic silty clays of low plasticity
	Silts and Clays (Liquid limit greater than 50)		MH		Inorganic silts, micaceous or distomaceous fine sandy or silty soils, organic silts
			CH		Inorganic clays of high plasticity, fat clays
			OH		Organic clays of medium to high plasticity, organic silts
	Highly Organic Soils		Pt		Peat and other highly organic soils

Laboratory Classification Criteria

Determine percentages of sand and gravel from grain size curve, depending on percentage of fines (fraction smaller than No. 200 sieve) coarse-grained soils are classified as follows:

Less than 5 percent..... GW, GP, SW, SP
More than 12 percent..... GM, GC, SM, SC
6 to 12 percent..... Borderline case4s requiring dual symbols*

$C_U = \frac{D_{60}}{D_{10}}$ greater than 4; $C_C = \frac{(D_{30})^2}{D_{10} \times D_{60}}$ between 1 and 3		
Not meeting all gradation requirements for GW		
Atterberg limits below "A" line or P.I. less than 4	Above "A" line with P.I. between 4 and 7 are borderline cases requiring use of dual symbols	
Atterberg limits above "A" line or P.I. greater than 7		
$C_U = \frac{D_{60}}{D_{10}}$ greater than 6; $C_C = \frac{(D_{30})^2}{D_{10} \times D_{60}}$ between 1 and 3		
Not meeting all gradation requirements for SW		
Atterberg limits below "A" line or P.I. less than 4	Above "A" line with P.I. between 4 and 7 are borderline cases requiring use of dual symbols	
Atterberg limits above "A" line or P.I. greater than 7		
Von Post Classification Limit	Strong colour or odour, and often fibrous texture	

Particle Size

Material	ASTM Sieve sizes	mm
Sand	#10 to #4	2.00 to 4.75
Coarse	#40 to #10	0.425 to 2.00
Medium	#200 to #40	0.075 to 0.425
Fine	< #200	< 0.075
Silt or Clay		

Particle Size

Material	ASTM Sieve Sizes	mm
Boulders	> 12 in.	> 300
Cobbles	3 in. to 12 in.	75 to 300
Gravel	3/4 in. to 3 in.	19 to 75
Coarse	#4 to 3/4 in.	4.75 to 19
Fine		

Plasticity Chart

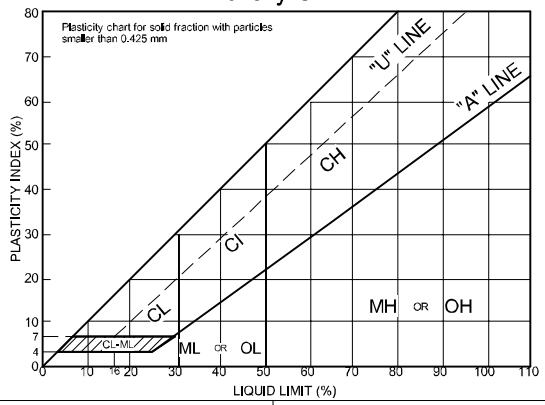

* Borderline classifications used for soils possessing characteristics of two groups are designated by combinations of groups symbols. For example; GW-GC, well-graded gravel-sand mixture with clay binder.

Other Symbol Types

	Asphalt		Bedrock (undifferentiated)		Cobbles
	Concrete		Limestone Bedrock		Boulders and Cobbles
	Fill		Cemented Shale		Silt Till
			Non-Cemented Shale		Clay Till

EXPLANATION OF FIELD AND LABORATORY TESTING

LEGEND OF ABBREVIATIONS AND SYMBOLS

LL - Liquid Limit (%)
PL - Plastic Limit (%)
PI - Plasticity Index (%)
MC - Moisture Content (%)
SPT - Standard Penetration Test
RQD - Rock Quality Designation
Qu - Unconfined Compression
Su - Undrained Shear Strength
VW - Vibrating Wire Piezometer
SI - Slope Inclinometer

▽ Water Level at Time of Drilling

▼ Water Level at End of Drilling

▼ Water Level After Drilling as Indicated on Test Hole Logs

FRACTION OF SECONDARY SOIL CONSTITUENTS ARE BASED ON THE FOLLOWING TERMINOLOGY

TERM	EXAMPLES	PERCENTAGE
and	and CLAY	35 to 50 percent
"y" or "ey"	clayey, silty	20 to 35 percent
some	some silt	10 to 20 percent
trace	trace gravel	1 to 10 percent

TERMS DESCRIBING CONSISTENCY OR COMPACTION CONDITION

The Standard Penetration Test blow count (N) of a non-cohesive soil can be related to compactness condition as follows:

Descriptive Terms	SPT (N) (Blows/300 mm)
Very loose	< 4
Loose	4 to 10
Compact	10 to 30
Dense	30 to 50
Very dense	> 50

The Standard Penetration Test blow count (N) of a cohesive soil can be related to its consistency as follows:

Descriptive Terms	SPT (N) (Blows/300 mm)
Very soft	< 2
Soft	2 to 4
Firm	4 to 8
Stiff	8 to 15
Very stiff	15 to 30
Hard	> 30

The undrained shear strength (Su) of a cohesive soil can be related to its consistency as follows:

Descriptive Terms	Undrained Shear Strength (kPa)
Very soft	< 12
Soft	12 to 25
Firm	25 to 50
Stiff	50 to 100
Very stiff	100 to 200
Hard	> 200

Sub-Surface Log

Test Hole TH16-01

Client:	Associated Engineering	**Project Number:**	0115-015-00
Project Name:	Russell Water Treatment Plant	**Location:**	UTM N-5628201, E-338475
Contractor:	Paddock Drilling Ltd.	**Ground Elevation:**	99.74 m
Method:	125mm Solid Stem Auger, SS3 Track Mounted Rig	**Date Drilled:**	4 October 2016

Sample Type: Grab (G) | Shelby Tube (T) | Split Spoon (SS) | Split Barrel (SB) | Core (C)

Particle Size Legend: Fines | Clay | Silt | Sand | Gravel | Cobbles | Boulders

Backfill Legend: Bentonite | Cement | Drill Cuttings | Filter Pack Sand | Grout | Slough

Elevation (m)	Depth (m)	MATERIAL DESCRIPTION	Sample Number	SPT (N)
		ORGANIC CLAY (FILL) - silty, trace sand, trace gravel (<10mm dia.), trace organics (roots) - black - moist, stiff, high plasticity	G01	
99.0	0.5	- no roots below 0.6m	G02	
		CLAY AND SILT (TILL) - trace sand, trace gravel (<10mm dia.), trace oxidation - brown - moist, stiff - intermediate to high plasticity	G03	
	1.0, 1.5			
	2.0	- firm below 1.8m	G04	
	2.5			
96.7	3.0	- stiff below 2.7m	G05	
		CLAY (TILL) - silty, trace sand, trace gravel (<10mm dia.), trace oxidation - brown - moist, stiff to very stiff - high plasticity		
	3.5, 4.0			
95.2	4.5		G06	
		CLAY SHALE - silty - grey, moist, hard, high plasticity, non-cemented, soil-like - SAND seam (<25mm thick) at 4.9m	G07	
	5.0, 5.5			
	6.0		G08	
93.3			SS09	100

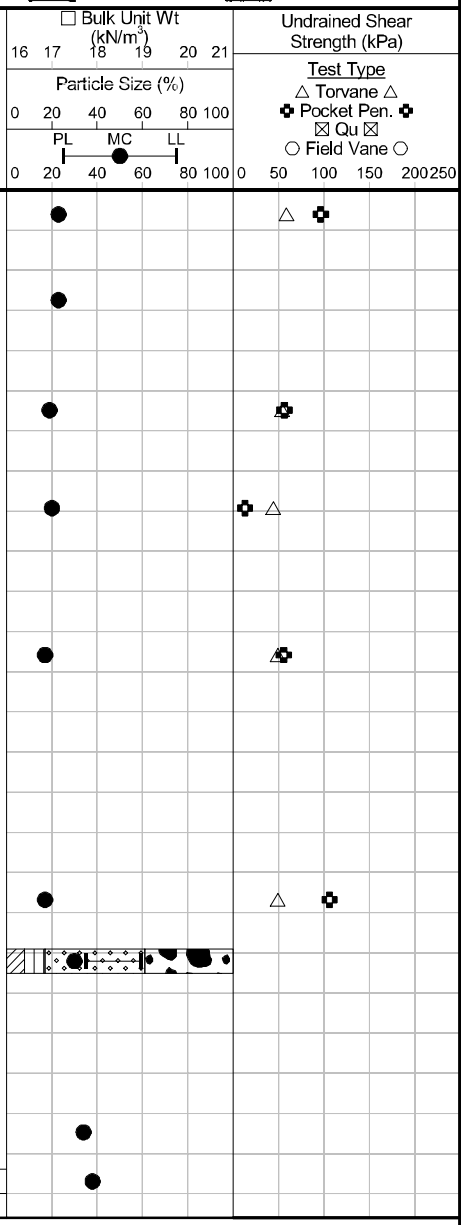

END OF TEST HOLE AT 6.4 m IN SHALE

Notes:
1. No sloughing observed.
2. Seepage observed at 4.9 m in SAND seam.
3. Test hole open to 6.4 m at completion of drilling.
4. Water level measured at 5.2 m at completion of drilling.
5. Test hole backfilled with auger cuttings. Piezometer SP-01 installed in test hole.
6. Test hole located 1.0 m NW of the SW corner of proposed new water treatment plant.
7. Water level measured at 1.62 m in SP-01 on November 14, 2016.

Logged By: Jodi Neumann **Reviewed By:** N.J Ferreira **Project Engineer:** Nelson Ferreira

Sub-Surface Log

Test Hole TH16-02

Client:	Associated Engineering	**Project Number:**	0115-015-00
Project Name:	Russell Water Treatment Plant	**Location:**	UTM N-5628223, E-338475
Contractor:	Paddock Drilling Ltd.	**Ground Elevation:**	99.32 m
Method:	125mm Solid Stem Auger, SS3 Track Mounted Rig	**Date Drilled:**	4 October 2016

Sample Type: Grab (G) | Shelby Tube (T) | Split Spoon (SS) | Split Barrel (SB) | Core (C)

Particle Size Legend: Fines | Clay | Silt | Sand | Gravel | Cobbles | Boulders

Elevation (m)	Depth (m)	Soil Symbol	MATERIAL DESCRIPTION	Sample Type	Sample Number	SPT (N)
			CLAY AND GRAVEL (FILL) - <20mm dia., some silt, some sand, trace roots, trace rubble - brown - moist, stiff - intermediate plasticity		G10	
	0.5					
					G11	
98.3	1.0					
			SAND - silty, trace gravel (<10mm dia.) - dark brown, wet		G12	
98.0						
	1.5		CLAY (TILL) - silty, trace sand, trace gravel (<10mm dia.), trace oxidation - brown - moist, very stiff - high plasticity			
	2.0					
					G13	
	2.5					
	3.0		- hard below 3.0m		SS14	39
	3.5		- grey below 3.7m			
	4.0					
95.1			CLAY SHALE - silty - grey - moist, hard - high plasticity - non-cemented, soil-like			
	4.5				SS15	84 / 213mm
	5.0					
94.1						

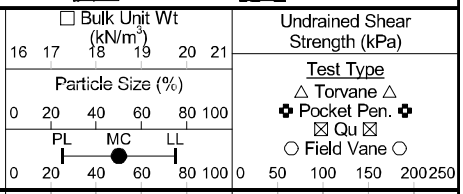

END OF TEST HOLE AT 5.2 m IN SHALE

Notes:

1. Sloughing and caving observed between 0.3 m - 1.1 m in CLAY AND GRAVEL (FILL).
2. Seepage observed between 1.1 m - 1.4 m in SAND.
3. Test hole open to 1.5 m due to caved material.
4. Water level measured at 0.9 m at completion of drilling
5. Test hole backfilled with auger cuttings.
6. Test hole located 5.0 m SE of the NW corner of proposed new water treatment plant.

Logged By: Jodi Neumann **Reviewed By:** N.J Ferreira **Project Engineer:** Nelson Ferreira

Sub-Surface Log

Test Hole TH16-03

Client:	Associated Engineering	**Project Number:**	0115-015-00
Project Name:	Russell Water Treatment Plant	**Location:**	UTM N-5628222, E-338500
Contractor:	Paddock Drilling Ltd.	**Ground Elevation:**	99.60 m
Method:	125mm Solid Stem Auger, SS3 Track Mounted Rig	**Date Drilled:**	4 October 2016

Sample Type: Grab (G) | Shelby Tube (T) | Split Spoon (SS) | Split Barrel (SB) | Core (C)

Particle Size Legend: Fines | Clay | Silt | Sand | Gravel | Cobbles | Boulders

Elevation (m)	Depth (m)	Soil Symbol	MATERIAL DESCRIPTION	Sample Type	Sample Number	SPT (N)
	0.5		ORGAINC CLAY (FILL) - stily, trace sand, trace rootlets - black - moist, stiff - high plasticity		G16	
	1.0				G17	
98.4						
98.1	1.5		SILT - trace clay, trace sand, greyish brown, moist, firm, low plasticity		G18	
97.6	2.0		CLAY AND SILT (TILL) - trace sand, trace gravel (<10mm dia.), brown, moist, stiff, high plasticity		SS19	8
97.3			SILT - trace sand, trace oxidation, brown, moist, compact		G20	
97.2			SAND - silty, trace gravel, coarse grained, brown, wet, dense		G21	
	2.5		CLAY (TILL) - silty, trace sand, trace gravel (<10mm dia.) - brown - moist, very stiff - high plasticity			
	3.0				SS22	22
	3.5					
	4.0					
95.3						
	4.5		CLAY SHALE - silty - mottled grey and red - moist, hard - high plasticity - non-cemented, soil-like		SS23	100
	5.0					
94.4						

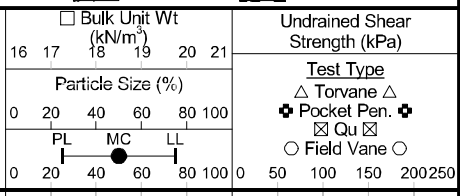

END OF TEST HOLE AT 5.2 m IN SHALE

Notes:

1. Seepage and sloughing observed between 1.5 m - 2.4 m in SILT and SAND layers.
2. Test hole open to 1.7 m at completion of drilling.
3. Water level measured at 1.7 m at completion of drilling
4. Test hole backfilled with auger cuttings.
5. Test hole located 1.5 m SW of the NE corner of proposed new water treatment plant.

Logged By: Jodi Neumann **Reviewed By:** N.J Ferreira **Project Engineer:** Nelson Ferreira

SUB-SURFACE LOG LOGS 06-10-16 RUSSELL WTP 0115-015-00 0_B_JN.GPJ TREK GEOTECHNICAL.GDT 24/11/16

Sub-Surface Log

Test Hole TH16-04

Client:	Associated Engineering	**Project Number:**	0115-015-00
Project Name:	Russell Water Treatment Plant	**Location:**	UTM N-5628202, E-338498
Contractor:	Paddock Drilling Ltd.	**Ground Elevation:**	99.64 m
Method:	125mm Solid Stem Auger, SS3 Track Mounted Rig	**Date Drilled:**	4 October 2016

Sample Type: Grab (G) | Shelby Tube (T) | Split Spoon (SS) | Split Barrel (SB) | Core (C)

Particle Size Legend: Fines | Clay | Silt | Sand | Gravel | Cobbles | Boulders

Elevation (m)	Depth (m)	Soil Symbol	MATERIAL DESCRIPTION	Sample Type	Sample Number	SPT (N)
	0.5		ORGANIC CLAY (FILL) - silty, trace sand, trace gravel (<10mm dia.), trace rootlets - black - moist, stiff to very stiff - high plasticity		G24	
	1.0				G25	
98.4						
	1.5		CLAY AND SILT (TILL) - silty, trace sand, trace gravel (<10mm dia.), trace oxidation - brown - moist, firm to stiff - high plasticity		G26	
	2.0					
97.4						
	2.5		SILT - trace sand, trace oxidation - brown - moist, compact		SS27	17
96.7						
	3.0		CLAY (TILL) - silty, trace sand, trace gravel, trace oxidation - brown - moist, very stiff - high plasticity		SS28	28
	3.5					
	4.0					
95.1	4.5					
94.8			CLAY SHALE - silty, mottled grey and red, moist, hard, high plasticity, non-cemented, soil-like		SS29	100 / 122mm

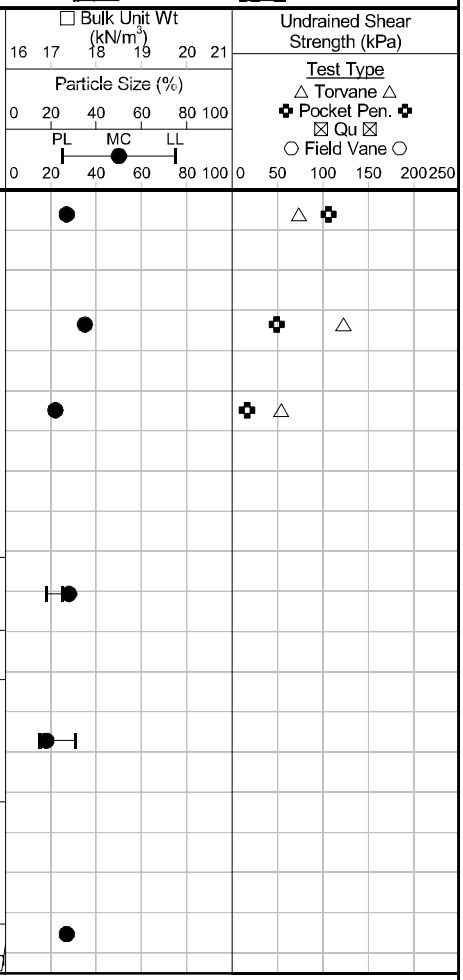

END OF TEST HOLE AT 4.9 m IN SHALE

Notes:
1. No seepage or sloughing observed.
2. Test hole open to 4.9 m at completion of drilling.
3. Water level measured at 4.9 m at completion of drilling.
4. Test hole backfilled with auger cuttings.
5. Test hole located 6.0 m NW of the SE corner of proposed new water treatment plant.

Logged By: Jodi Neumann **Reviewed By:** N.J Ferreira **Project Engineer:** Nelson Ferreira

SUB-SURFACE LOG LOGS 06-10-16 RUSSELL WTP 0115-015-00 0_B_JN.GPJ TREK GEOTECHNICAL.GDT 24/11/16

Appendix A - Laboratory Testing Results

MEMORANDUM

Quality Engineering | Valued Relationships

Date	October 25, 2016
To	Nelson Ferreira, TREK Geotechnical
From	Paul Bevel, TREK Geotechnical
Project No.	0115-015-00
Project	Russell Water Treatment Plant
Subject	Laboratory Testing Results – Lab Req. R559
Distribution	Reinhardt Van Rensburg

Attached are the laboratory testing results for the above noted project. The testing included moisture content determinations, grain size analysis (mechanical sieve) and Atterberg limits

Kind Regards,

P. Bevel

Paul Bevel

Attach.

www.trekgeotechnical.ca
1712 St. James Street | Winnipeg, Manitoba R3H 0L3 | Tel 1.204.975.9433 | Fax 1.204.975.9435

www.trekgeotechnical.ca
1712 St. James Street
Winnipeg, MB R3H 0L3
Tel: 204.975.9433 Fax: 204.975.9435

Moisture Content Report
ASTM D2216-98

Project No. 0115-015-00
Client Associated Engineering
Project Russell Water Treatment Plant

Sample Date 06-Oct-16
Test Date 11-Oct-16
Technician HS

Test Pit	TH16-01	TH16-01	TH16-01	TH16-01	TH16-01	TH16-01
Depth (m)	0.0 - 0.3	0.6 - 0.8	1.2 - 1.5	1.8 - 2.1	2.7 - 3.0	4.3 - 4.6
Sample #	G01	G02	G03	G04	G05	G06
Tare ID	F40	Z112	P07	F1	Z07	Z123
Mass of tare	8.3	8.7	8.3	8.7	8.8	8.4
Mass wet + tare	239.4	227.2	359.7	241.2	306.4	350.2
Mass dry + tare	196.8	186.0	303.6	202.6	262.4	300.8
Mass water	42.6	41.2	56.1	38.6	44.0	49.4
Mass dry soil	188.5	177.3	295.3	193.9	253.6	292.4
Moisture %	22.6%	23.2%	19.0%	19.9%	17.4%	16.9%

Test Pit	TH16-01	TH16-01	TH16-01	TH16-02	TH16-02	TH16-02
Depth (m)	4.7 - 4.9	5.8 - 5.9	6.1 - 6.2	0.0 - 0.3	0.8 - 0.9	1.1 - 1.2
Sample #	G07	G08	SS09	G10	G11	G12
Tare ID	Z42	E17	P29	D10	E60	AA22
Mass of tare	8.3	8.8	8.4	8.6	8.4	6.6
Mass wet + tare	297.8	392.3	122.6	467.5	554.2	439.2
Mass dry + tare	231.4	295.7	91.4	398.4	437.2	304.4
Mass water	66.4	96.6	31.2	69.1	117.0	134.8
Mass dry soil	223.1	286.9	83.0	389.8	428.8	297.8
Moisture %	29.8%	33.7%	37.6%	17.7%	27.3%	45.3%

Test Pit	TH16-02	TH16-02	TH16-02	TH16-03	TH16-03	TH16-03
Depth (m)	2.1 - 2.3	3.0 - 3.5	4.6 - 4.9	0.0 - 0.3	0.8 - 0.9	1.2 - 1.5
Sample #	G13	SS14	SS15	G16	G17	G18
Tare ID	AA20	AB93	N01	Z100	AA02	Z41
Mass of tare	6.6	6.6	8.7	8.7	6.7	8.6
Mass wet + tare	477.6	315.5	326.2	226.2	489.8	473.2
Mass dry + tare	404.0	269.4	239.5	164.6	381.3	361.2
Mass water	73.6	46.1	86.7	61.6	108.5	112.0
Mass dry soil	397.4	262.8	230.8	155.9	374.6	352.6
Moisture %	18.5%	17.5%	37.6%	39.5%	29.0%	31.8%

www.trekgeotechnical.ca
1712 St. James Street
Winnipeg, MB R3H 0L3
Tel: 204.975.9433 Fax: 204.975.9435

Moisture Content Report
ASTM D2216-98

Project No. 0115-015-00
Client Associated Engineering
Project Russell Water Treatment Plant

Sample Date 06-Oct-16
Test Date 11-Oct-16
Technician HS

Test Pit	TH16-03	TH16-03	TH16-03	TH16-03	TH16-03	TH16-04
Depth (m)	1.5 - 2.0	2.0 - 2.1	2.3 - 2.4	3.0 - 3.5	4.6 - 4.8	0.0 - 0.3
Sample #	SS19	G20	G21	SS22	SS23	G24
Tare ID	F7	D27	H5	AB54	AC20	AA06
Mass of tare	8.4	8.2	8.6	6.7	6.7	6.6
Mass wet + tare	574.9	340.0	230.3	302.0	147.0	226.4
Mass dry + tare	407.7	268.6	193.7	258.6	113.0	179.7
Mass water	167.2	71.4	36.6	43.4	34.0	46.7
Mass dry soil	399.3	260.4	185.1	251.9	106.3	173.1
Moisture %	41.9%	27.4%	19.8%	17.2%	32.0%	27.0%

Test Pit	TH16-04	TH16-04	TH16-04	TH16-04	TH16-04	
Depth (m)	0.8 - 0.9	1.2 - 1.5	2.3 - 2.7	3.0 - 3.8	4.6 - 4.7	
Sample #	G25	G26	SS27	SS28	SS29	
Tare ID	E77	W111	Z36	AA21	K39	
Mass of tare	8.5	8.7	8.5	6.6	8.4	
Mass wet + tare	330.9	357.9	312.4	246.5	153.9	
Mass dry + tare	247.5	294.1	246.9	210.8	123.1	
Mass water	83.4	63.8	65.5	35.7	30.8	
Mass dry soil	239.0	285.4	238.4	204.2	114.7	
Moisture %	34.9%	22.4%	27.5%	17.5%	26.9%	

Test Pit						
Depth (m)						
Sample #						
Tare ID						
Mass of tare						
Mass wet + tare						
Mass dry + tare						
Mass water						
Mass dry soil						
Moisture %						

www.trekgeotechnical.ca
1712 St. James Street
Winnipeg, MB R3H 0L3
Tel: 204.975.9433 Fax: 204.975.9435

Atterberg Limits
ASTM D4318-10e1

Project No.	0115-015-00
Client	Associated Engineering
Project	Russell Water Treatment Plant
Test Hole	TH16-01
Sample #	G07
Depth (m)	4.7-4.9
Sample Date	06-Oct-16
Test Date	18-Oct-16
Technician	MM

Liquid Limit	59
Plastic Limit	35
Plasticity Index	24

Liquid Limit

Trial #	**1**	**2**	**3**	**4**	**5**
Number of Blows (N)	21	26	33		
Mass Wet Soil + Tare (g)	21.767	21.230	20.488		
Mass Dry Soil + Tare (g)	18.978	18.626	18.134		
Mass Tare (g)	14.297	14.195	14.067		
Mass Water (g)	2.789	2.604	2.354		
Mass Dry Soil (g)	4.681	4.431	4.067		
Moisture Content (%)	59.581	58.768	57.881		

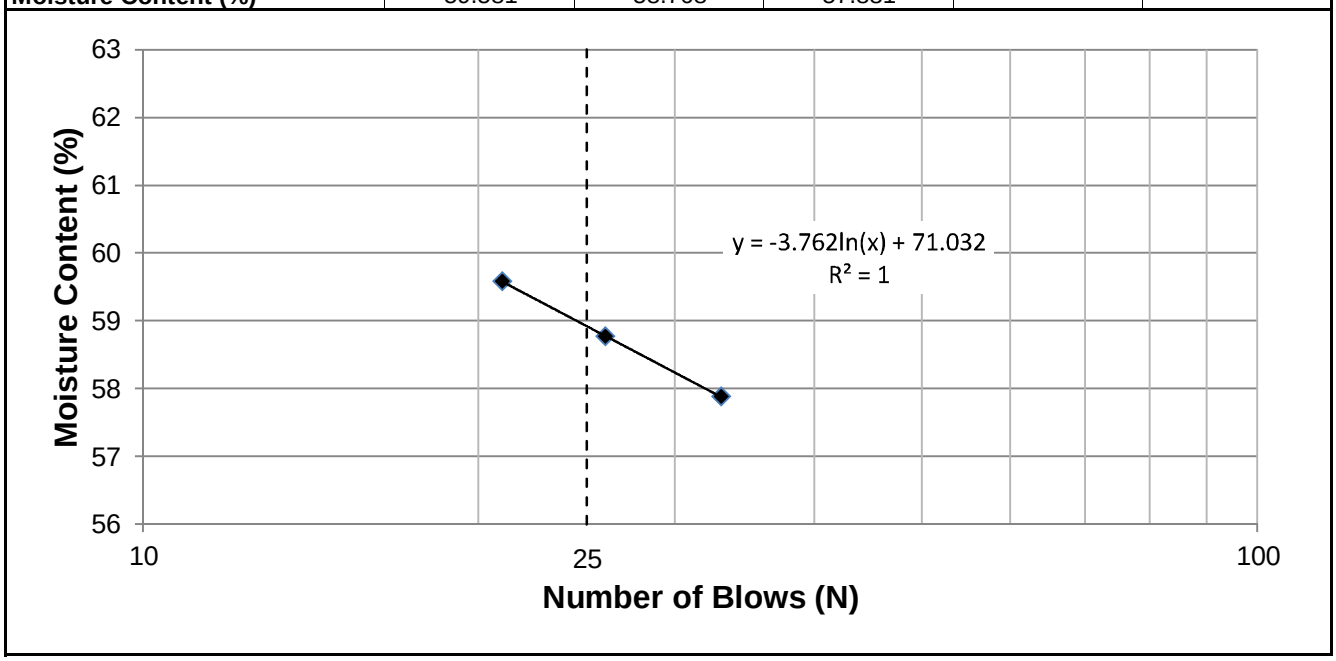

Plastic Limit

Trial #	**1**	**2**	**3**	**4**	**5**
Mass Wet Soil + Tare (g)	20.045	20.081			
Mass Dry Soil + Tare (g)	18.511	18.512			
Mass Tare (g)	14.089	14.015			
Mass Water (g)	1.534	1.569			
Mass Dry Soil (g)	4.422	4.497			
Moisture Content (%)	34.690	34.890			

www.trekgeotechnical.ca
1712 St. James Street
Winnipeg, MB R3H 0L3
Tel: 204.975.9433 Fax: 204.975.9435

Atterberg Limits
ASTM D4318-10e1

Project No.	0115-015-00
Client	Associated Engineering
Project	Russell Water Treatment Plant
Test Hole	TH16-02
Sample #	SS14
Depth (m)	3.0-3.5
Sample Date	06-Oct-16
Test Date	18-Oct-16
Technician	MM

Liquid Limit	34
Plastic Limit	18
Plasticity Index	16

Liquid Limit

Trial #	**1**	**2**	**3**	**4**	**5**
Number of Blows (N)	19	24	32		
Mass Wet Soil + Tare (g)	21.024	25.656	19.776		
Mass Dry Soil + Tare (g)	19.173	22.731	18.380		
Mass Tare (g)	13.894	14.142	14.172		
Mass Water (g)	1.851	2.925	1.396		
Mass Dry Soil (g)	5.279	8.589	4.208		
Moisture Content (%)	35.063	34.055	33.175		

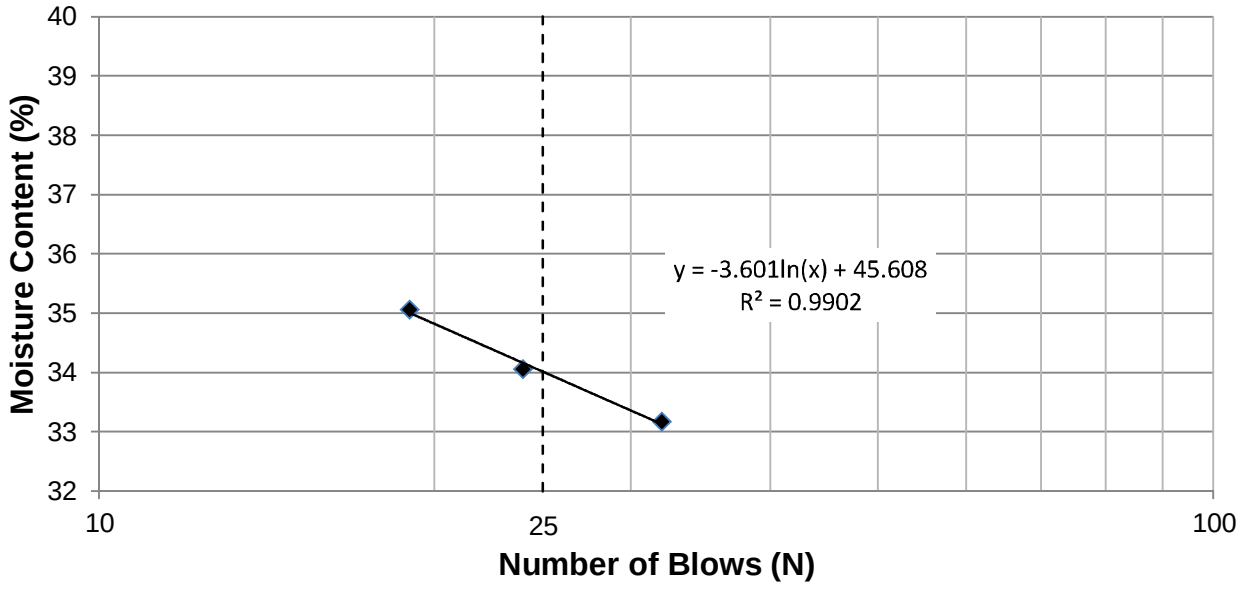

Plastic Limit

Trial #	**1**	**2**	**3**	**4**	**5**
Mass Wet Soil + Tare (g)	20.013	19.856			
Mass Dry Soil + Tare (g)	19.113	18.951			
Mass Tare (g)	14.166	13.946			
Mass Water (g)	0.900	0.905			
Mass Dry Soil (g)	4.947	5.005			
Moisture Content (%)	18.193	18.082			

www.trekgeotechnical.ca
1712 St. James Street
Winnipeg, MB R3H 0L3
Tel: 204.975.9433 Fax: 204.975.9435

Atterberg Limits
ASTM D4318-10e1

Project No.	0115-015-00
Client	Associated Engineering
Project	Russell Water Treatment Plant
Test Hole	TH16-03
Sample #	G18
Depth (m)	1.2-1.5
Sample Date	06-Oct-16
Test Date	18-Oct-16
Technician	MM

Liquid Limit	42
Plastic Limit	24
Plasticity Index	18

Liquid Limit

Trial #	**1**	**2**	**3**	**4**	**5**
Number of Blows (N)	21	35	26		
Mass Wet Soil + Tare (g)	22.768	22.661	24.193		
Mass Dry Soil + Tare (g)	20.191	20.232	21.144		
Mass Tare (g)	14.158	14.199	13.927		
Mass Water (g)	2.577	2.429	3.049		
Mass Dry Soil (g)	6.033	6.033	7.217		
Moisture Content (%)	42.715	40.262	42.247		

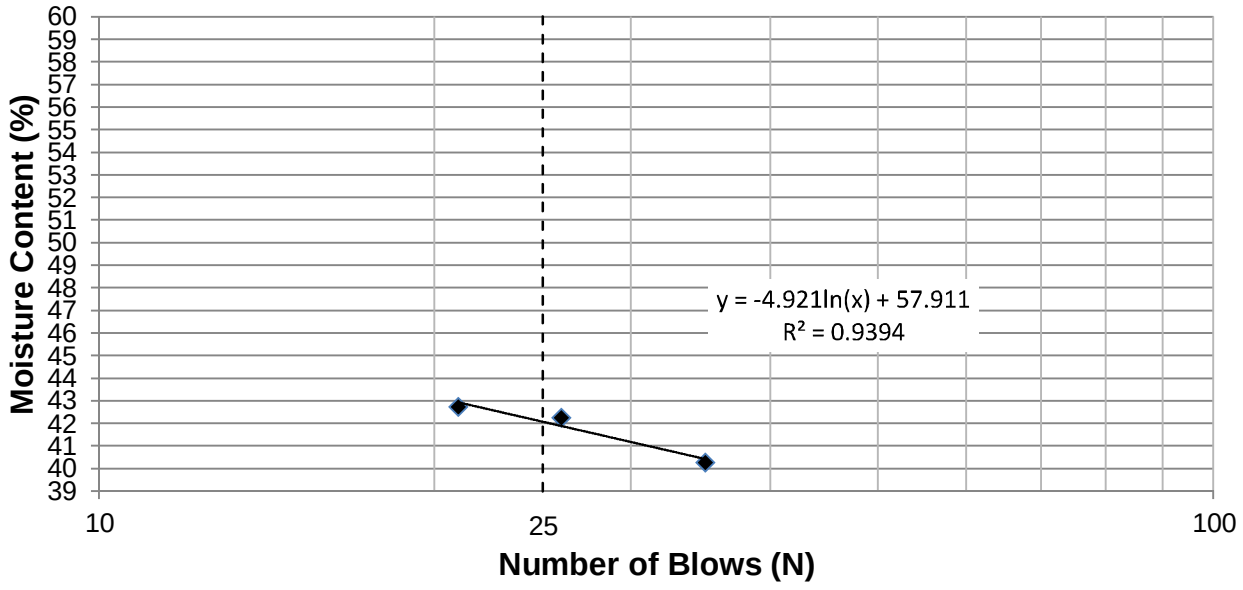

Plastic Limit

Trial #	**1**	**2**	**3**	**4**	**5**
Mass Wet Soil + Tare (g)	20.182	20.040			
Mass Dry Soil + Tare (g)	19.035	18.885			
Mass Tare (g)	14.164	14.229			
Mass Water (g)	1.147	1.155			
Mass Dry Soil (g)	4.871	4.656			
Moisture Content (%)	23.548	24.807			

www.trekgeotechnical.ca
1712 St. James Street
Winnipeg, MB R3H 0L3
Tel: 204.975.9433 Fax: 204.975.9435

Atterberg Limits
ASTM D4318-10e1

Project No.	0115-015-00
Client	Associated Engineering
Project	Russell Water Treatment Plant
Test Hole	TH16-03
Sample #	SS23
Depth (m)	4.6-4.8
Sample Date	06-Oct-16
Test Date	18-Oct-16
Technician	MM

Liquid Limit	55
Plastic Limit	38
Plasticity Index	16

Liquid Limit

Trial #	**1**	**2**	**3**	**4**	**5**
Number of Blows (N)	16	26	22		
Mass Wet Soil + Tare (g)	20.149	20.517	22.611		
Mass Dry Soil + Tare (g)	17.941	18.309	19.611		
Mass Tare (g)	14.044	14.266	14.199		
Mass Water (g)	2.208	2.208	3.000		
Mass Dry Soil (g)	3.897	4.043	5.412		
Moisture Content (%)	56.659	54.613	55.432		

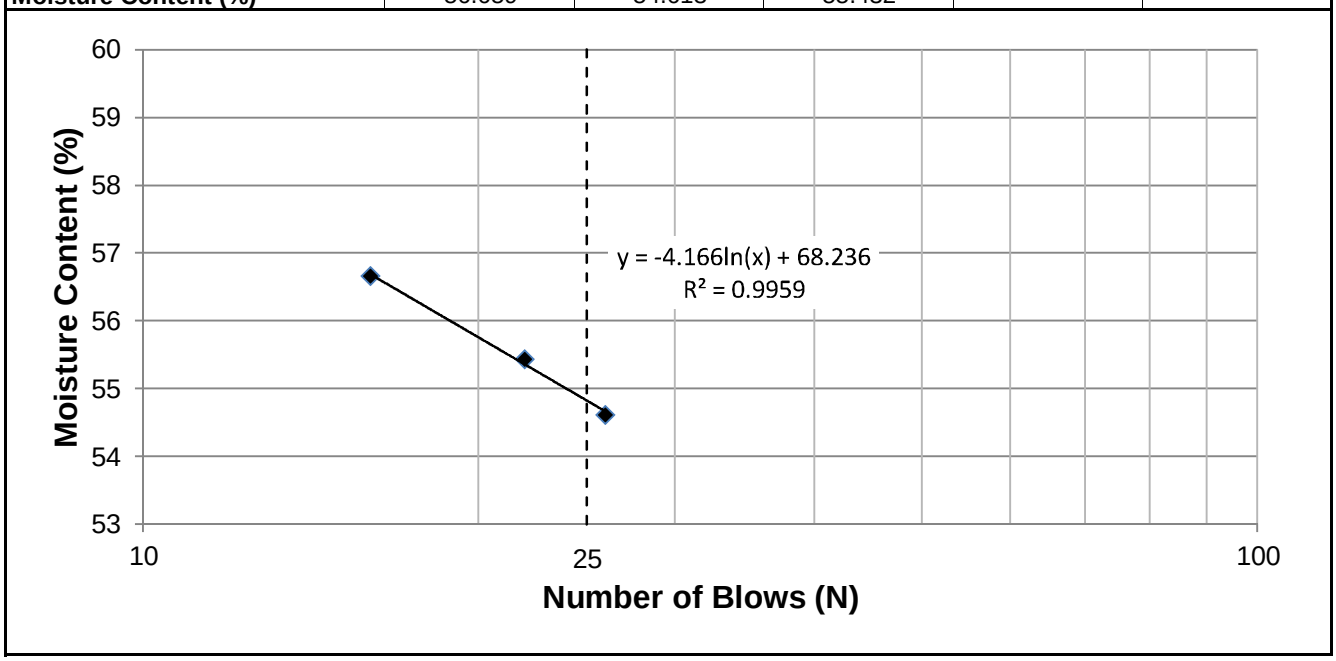

Plastic Limit

Trial #	**1**	**2**	**3**	**4**	**5**
Mass Wet Soil + Tare (g)	19.870	20.317			
Mass Dry Soil + Tare (g)	18.234	18.672			
Mass Tare (g)	14.038	14.320			
Mass Water (g)	1.636	1.645			
Mass Dry Soil (g)	4.196	4.352			
Moisture Content (%)	38.990	37.799			

www.trekgeotechnical.ca
1712 St. James Street
Winnipeg, MB R3H 0L3
Tel: 204.975.9433 Fax: 204.975.9435

Atterberg Limits
ASTM D4318-10e1

Project No.	0115-015-00
Client	Associated Engineering
Project	Russell Water Treatment Plant
Test Hole	TH16-04
Sample #	SS27
Depth (m)	2.3-2.7
Sample Date	06-Oct-16
Test Date	18-Oct-16
Technician	MM

Liquid Limit	25
Plastic Limit	18
Plasticity Index	7

Liquid Limit

Trial #	**1**	**2**	**3**	**4**	**5**
Number of Blows (N)	17	24	29		
Mass Wet Soil + Tare (g)	25.348	21.460	24.934		
Mass Dry Soil + Tare (g)	23.022	19.952	22.790		
Mass Tare (g)	14.112	14.052	14.298		
Mass Water (g)	2.326	1.508	2.144		
Mass Dry Soil (g)	8.910	5.900	8.492		
Moisture Content (%)	26.105	25.559	25.247		

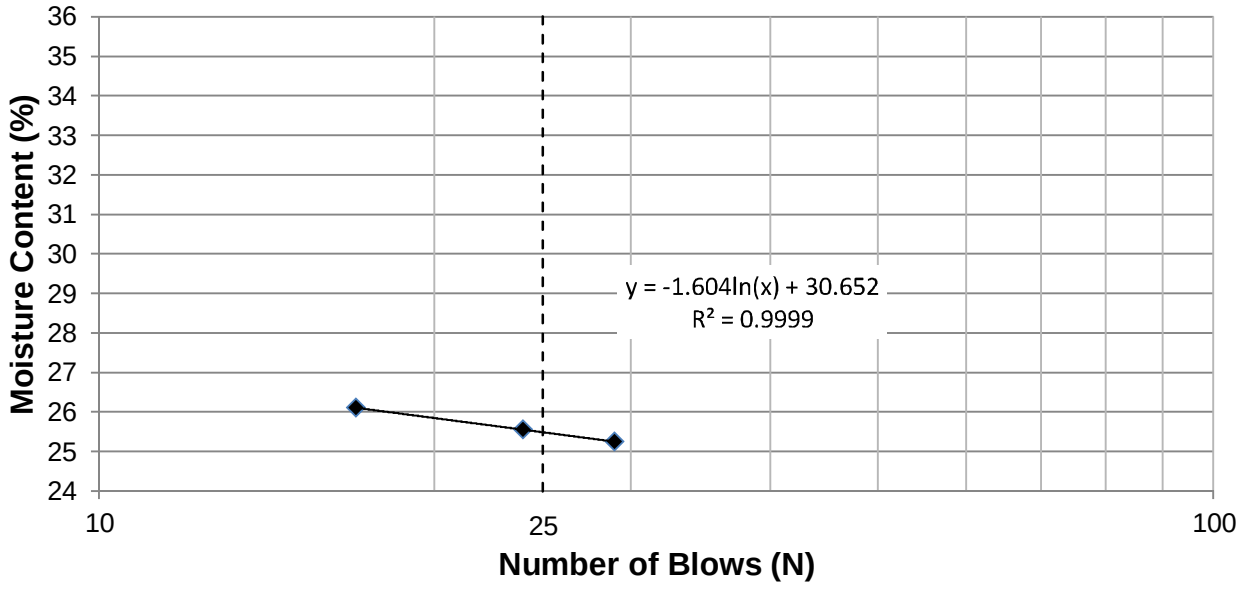

Plastic Limit

Trial #	**1**	**2**	**3**	**4**	**5**
Mass Wet Soil + Tare (g)	19.894	19.968			
Mass Dry Soil + Tare (g)	19.005	19.087			
Mass Tare (g)	14.135	14.167			
Mass Water (g)	0.889	0.881			
Mass Dry Soil (g)	4.870	4.920			
Moisture Content (%)	18.255	17.907			

www.trekgeotechnical.ca
1712 St. James Street
Winnipeg, MB R3H 0L3
Tel: 204.975.9433 Fax: 204.975.9435

Atterberg Limits
ASTM D4318-10e1

Project No.	0115-015-00
Client	Associated Engineering
Project	Russell Water Treatment Plant
Test Hole	TH16-04
Sample #	SS28
Depth (m)	3.0-3.8
Sample Date	06-Oct-16
Test Date	18-Oct-16
Technician	MM

Liquid Limit	31
Plastic Limit	15
Plasticity Index	16

Liquid Limit

Trial #	**1**	**2**	**3**	**4**	**5**
Number of Blows (N)	18	23	33		
Mass Wet Soil + Tare (g)	23.488	21.772	20.045		
Mass Dry Soil + Tare (g)	21.207	19.926	18.638		
Mass Tare (g)	14.259	14.144	13.952		
Mass Water (g)	2.281	1.846	1.407		
Mass Dry Soil (g)	6.948	5.782	4.686		
Moisture Content (%)	32.830	31.927	30.026		

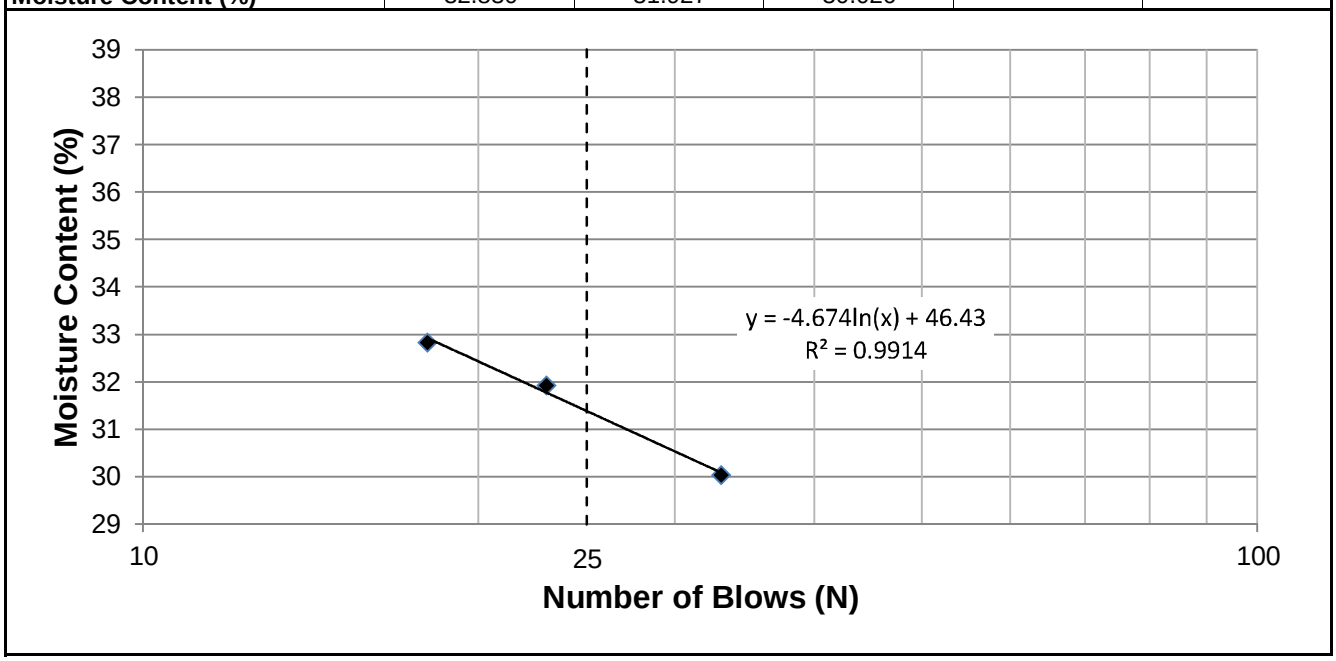

Plastic Limit

Trial #	**1**	**2**	**3**	**4**	**5**
Mass Wet Soil + Tare (g)	20.095	19.967			
Mass Dry Soil + Tare (g)	19.277	19.199			
Mass Tare (g)	14.172	14.033			
Mass Water (g)	0.818	0.768			
Mass Dry Soil (g)	5.105	5.166			
Moisture Content (%)	16.024	14.866			

www.trekgeotechnical.ca
1712 St. James Street
Winnipeg, MB R3H 0L3
Tel: 204.975.9433 Fax: 204.975.9435

Grain Size Analysis (Sieve Method)

ASTM C136-14

ASTM C117-13

Project No.	0115-015-00
Client	Associated Engineering
Project	Russell Water Treatment Plant
Test Hole	TH16-01
Sample #	G12
Depth	15.5 - 16.0
Date Sampled	4-Oct-16
Date Tested	13-Oct-16
Technician	HS

Gravel %	39.3
Sand %	43.8
Fines %	16.9

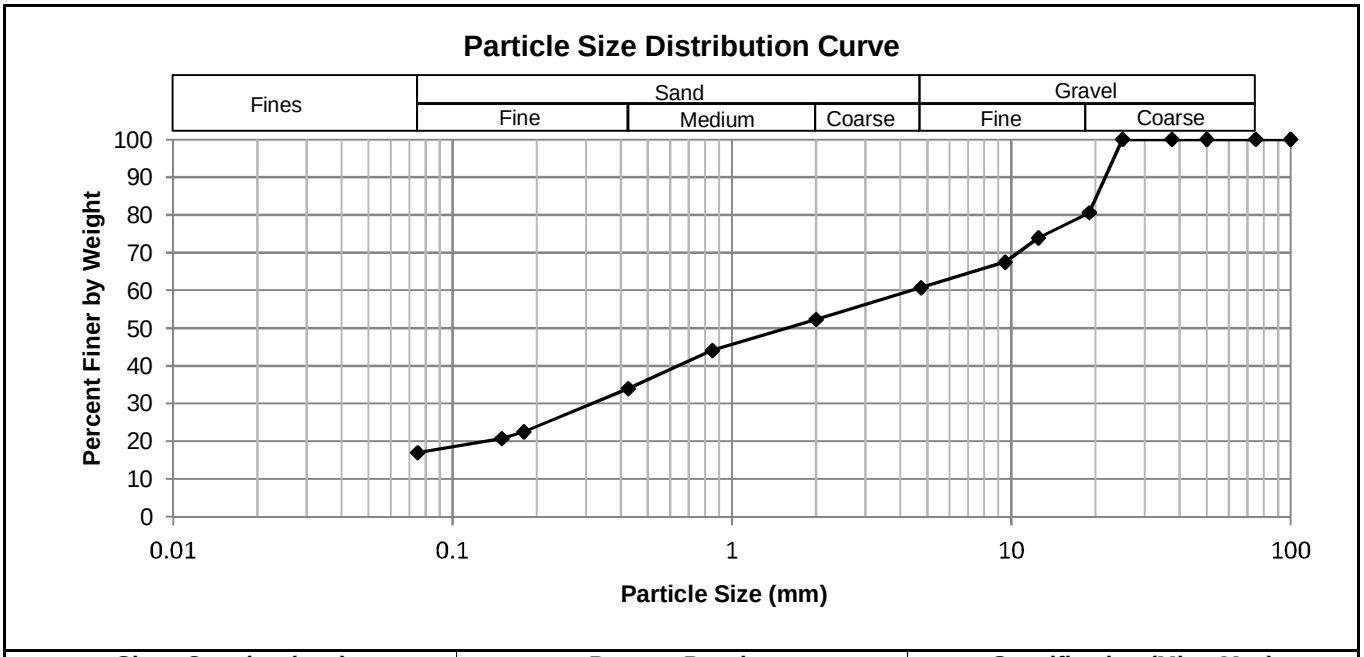

Sieve Opening (mm)	Percent Passing	Specification (Min - Max)
25.0	100	
19.0	81	
12.5	74	
9.5	67	
4.75	61	
2.00	52	
0.85	44	
0.425	34	
0.180	22	
0.150	21	
0.075	17	

www.trekgeotechnical.ca
1712 St. James Street
Winnipeg, MB R3H 0L3
Tel: 204.975.9433 Fax: 204.975.9435

Grain Size Analysis (Sieve Method)

ASTM C136-14

ASTM C117-13

Project No.	0115-015-00
Client	Associated Engineering
Project	Russell Water Treatment Plant
Test Hole	TH16-03
Sample #	G21
Depth	7.5 - 8.0
Date Sampled	4-Oct-16
Date Tested	13-Oct-16
Technician	HS

Gravel %	1.6
Sand %	71.1
Fines %	27.3

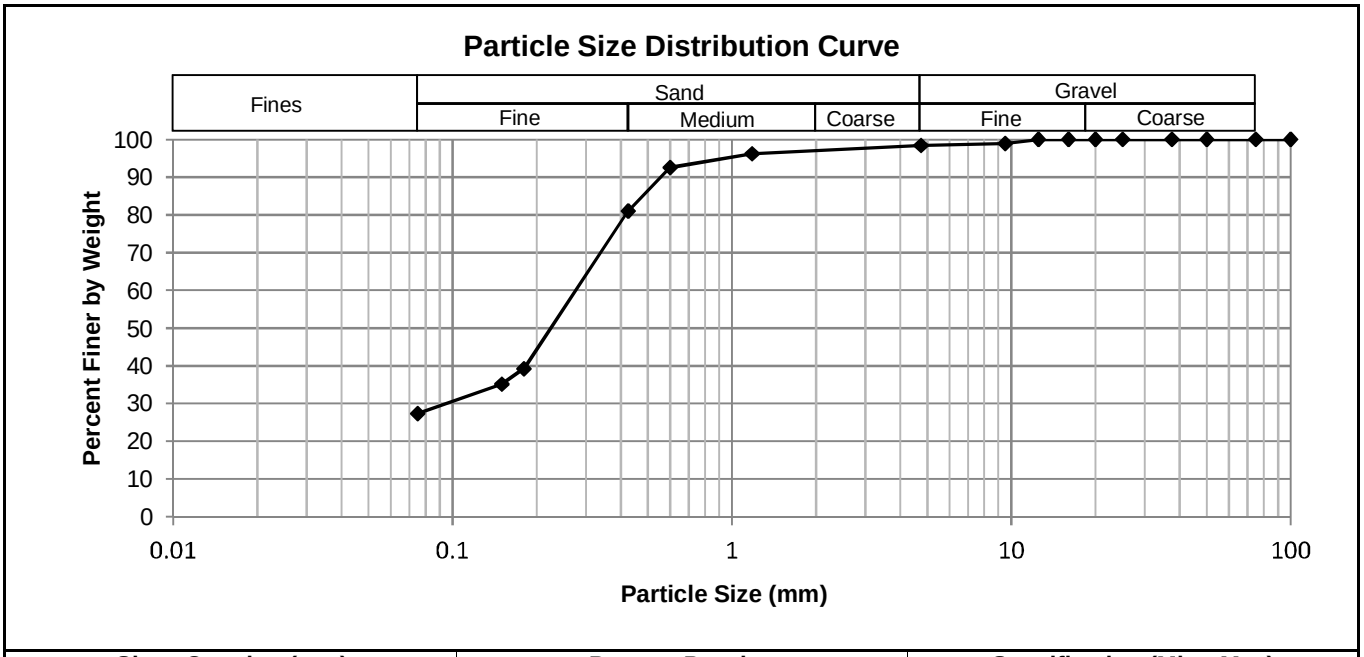

Sieve Opening (mm)	Percent Passing	Specification (Min - Max)
150	100	
125	100	
100	100	
75.0	100	
50.0	100	
37.5	100	
25.0	100	
20.0	100	
16.0	100	
12.5	100	
9.5	99	
4.75	98	
1.18	96	
0.60	93	
0.425	81	
0.180	39	
0.150	35	
0.075	27	

TREK Geotechnical Inc.
ATTN: NELSON FERREIRA
1712 St. James Street
Winnipeg MB R3H 0L3

Date Received: 12-OCT-16
Report Date: 20-OCT-16 13:09 (MT)
Version: FINAL

Client Phone: 204-782-5784

Certificate of Analysis

Lab Work Order #: L1842186
Project P.O. #: 0115-015-00
Job Reference:
C of C Numbers:
Legal Site Desc:

Craig Riddell, B.Sc.Ag
Account Manager

[This report shall not be reproduced except in full without the written authority of the Laboratory.]

ALS ENVIRONMENTAL ANALYTICAL REPORT

Sample Details/Parameters	Result	Qualifier*	D.L.	Units	Extracted	Analyzed	Batch
L1842186-1 TH16-01 G08 (19'-19.5')							
Sampled By: CLIENT on 04-OCT-16							
Matrix: GRAB							
Miscellaneous Parameters							
Water Soluble Sulfate	0.121		0.010	%	19-OCT-16	19-OCT-16	R3575604
L1842186-2 TH16-01 G26 (4'-5')							
Sampled By: CLIENT on 04-OCT-16							
Matrix: GRAB							
Miscellaneous Parameters							
Water Soluble Sulfate	0.137		0.010	%	19-OCT-16	19-OCT-16	R3575604

* Refer to Referenced Information for Qualifiers (if any) and Methodology.

Reference Information

Test Method References:

ALS Test Code	Matrix	Test Description	Method Reference**
SO4-WATER-SOL-SK	Soil	Water Soluble Sulfate (6 hour 1:10)	CSA A23.2-3B (CONCRETE)

** ALS test methods may incorporate modifications from specified reference methods to improve performance.

The last two letters of the above test code(s) indicate the laboratory that performed analytical analysis for that test. Refer to the list below:

Laboratory Definition Code	Laboratory Location
SK	ALS ENVIRONMENTAL - SASKATOON, SASKATCHEWAN, CANADA

Chain of Custody Numbers:

GLOSSARY OF REPORT TERMS

Surrogates are compounds that are similar in behaviour to target analyte(s), but that do not normally occur in environmental samples. For applicable tests, surrogates are added to samples prior to analysis as a check on recovery. In reports that display the D.L. column, laboratory objectives for surrogates are listed there.
mg/kg - milligrams per kilogram based on dry weight of sample
mg/kg wwt - milligrams per kilogram based on wet weight of sample
mg/kg lwt - milligrams per kilogram based on lipid-adjusted weight
mg/L - unit of concentration based on volume, parts per million.
< - Less than.
D.L. - The reporting limit.
N/A - Result not available. Refer to qualifier code and definition for explanation.

Test results reported relate only to the samples as received by the laboratory.
UNLESS OTHERWISE STATED, ALL SAMPLES WERE RECEIVED IN ACCEPTABLE CONDITION.
Analytical results in unsigned test reports with the DRAFT watermark are subject to change, pending final QC review.

Chain of Custody (COC) / Analytical Request Form

ALS Environmental

www.alsglobal.com

Canada Toll Free: 1 800 668 9878

L1842186-COFC

COC Number: 14 -

Page 1 of 1

L1842186

Report To		Report Format / Distribution		*Select Service Level Below (Rush Turnaround Time (TAT) is not available for all tests)
Company:	TREK Geotechnical Inc	Select Report Format:	☑ PDF ☐ EXCEL ☐ EDD (DIGITAL)	R ☑ Regular (Standard TAT if received by 3 pm - business days)
Contact:	Nelson Ferreira	Quality Control (QC) Report with Report	☑ Yes ☐ No	P ☐ Priority (2-4 bus. days if received by 3pm) 50% surcharge - contact ALS to confirm TAT
Address:	1712 St James Street Winnipeg, MB R3H 0L3	☐ Criteria on Report - provide details below if box checked		E ☐ Emergency (1-2 bus. days if received by 3pm) 100% surcharge - contact ALS to confirm TAT
		Select Distribution:	☑ EMAIL ☐ MAIL ☐ FAX	E2 ☐ Same day or weekend emergency - contact ALS to confirm TAT and surcharge
Phone:	204-792-5784	Email 1 or Fax	nferreira@trekgeotechnical.ca	Specify Date Required for E2,E or P:
		Email 2	rvanrensburg@trekgeotechnical.ca	

Invoice To	Same as Report To	☑ Yes ☐ No	Invoice Distribution	
	Copy of Invoice with Report	☑ Yes ☐ No	Select Invoice Distribution:	☑ EMAIL ☐ MAIL ☐ FAX
Company:			Email 1 or Fax	nbrown@trekgeotechnical.ca
Contact:	Nelson Ferreira		Email 2	nferreira@trekgeotechnical.ca

Project Information		Oil and Gas Required Fields (client use)	
ALS Quote #:		Approver ID:	Cost Center:
Job #:		GL Account:	Routing Code:
PO / AFE:	0115-015-00	Activity Code:	
LSD:		Location:	
ALS Lab Work Order # (lab use only)		ALS Contact:	Sampler:

Analysis Request — indicate Filtered (F), Preserved (P) or Filtered and Preserved (F/P) below

ALS Sample # (lab use only)	Sample Identification and/or Coordinates (This description will appear on the report)	Date (dd-mmm-yy)	Time (hh:mm)	Sample Type	SO4-Water-Soluble (CSA-A23.2-3B)	Number of Containers
	TH16-01 G08 (19' - 19.5')	04-Oct-16		Grab	R	
	TH16-04 G26 (4' - 5')	04-Oct-16		Grab	R	

Drinking Water (DW) Samples[1] (client use)	Special Instructions / Specify Criteria to add on report (client Use)	SAMPLE CONDITION AS RECEIVED (lab use only)
Are samples taken from a Regulated DW System? ☐ Yes ☑ No	18.3°C	Frozen ☐ SIF Observations Yes ☐ No ☐
Are samples for human drinking water use? ☐ Yes ☑ No		Ice packs Yes ☐ No ☐ Custody seal intact Yes ☐ No ☐
		Cooling Initiated ☐
		INITIAL COOLER TEMPERATURES °C / FINAL COOLER TEMPERATURES °C

SHIPMENT RELEASE (client use)			INITIAL SHIPMENT RECEPTION (lab use only)			FINAL SHIPMENT RECEPTION (lab use only)		
Released by:	Date: Oct 12/16	Time: 12:45pm	Received by: A.K.	Date: Oct 12/16	Time: 9:00	Received by:	Date:	Time:

REFER TO BACK PAGE FOR ALS LOCATIONS AND SAMPLING INFORMATION

WHITE - LABORATORY COPY YELLOW - CLIENT COPY

NA-FM0026e v09 Front/04 January 2014

Failure to complete all portions of this form may delay analysis. Please fill in this form LEGIBLY. By the use of this form the user acknowledges and agrees with the Terms and Conditions as specified on the back page of the white - report copy.

1. If any water samples are taken from a Regulated Drinking Water (DW) System, please submit using an Authorized DW COC form.

APPENDIX B

EQUIPMENT SUPPLIER INFORMATION

4162970 - TOWN OF RUSSELL WTP - FIELD WIRING SCHEDULE

Note: This schedule lists all known field connections, except for connections between CP-1000 WTP PLC Panel and various connections not fully specified in RFP: Field instruments and valves to be supplied by General Contractor, MCC connections for motor control/status, automatic transfer switch status, generator status, and any other connections that are unspecified in the RFP.

DELCO P&ID	AE P&ID	Delco Tag	AE Tag	End 1 (Device)	End 2	Signal	Cabling	Signal Type	Power	Device Location (Approximate)	Model
MTU-PID-001	4866-RFP-P-004	FV-4115	FV-4115	Solenoid Valve Post-SBS CL Analyzer	CP-4000 - MTU RIO Panel	Open Command	2-#14	120VAC Disc. Out	-	Water Treatment Plant	EWP 120VAC Coil
MTU-PID-001	4866-RFP-P-004	AIT-4002	AIT-4002	Post-SBS CL Analyzer	120VAC Building Circuit	Power	2-#14, #14 Ground	Power Supply	120VAC	Water Treatment Plant	Hach CL17 - 5440001
					CP-4000 - MTU RIO Panel	Chlorine Level Indication	1 PR-18GA, Twisted, Shielded	Analog 4-20mA	-		
						Fault Signal	2-#18	24VDC Disc. Contact In	-		
MTU-PID-001	4866-RFP-P-004	FV-4109	FV-4109	Solenoid Valve Pre-SBS CL Analyzer	CP-4000 - MTU RIO Panel	Open Command	2-#14	120VAC Disc. Out	-	Water Treatment Plant	EWP 120VAC Coil
MTU-PID-001	4866-RFP-P-004	AIT-4001	AIT-4001	Pre-SBS CL Analyzer	120VAC Building Circuit	Power	2-#14, #14 Ground	Power Supply	120VAC	Water Treatment Plant	Hach CL17 - 5440001
					CP-4000 - MTU RIO Panel	Chlorine Level Indication	1 PR-18GA, Twisted, Shielded	Analog 4-20mA	-		
						Fault Signal	2-#18	24VDC Disc. Contact In	-		
MTU-PID-001	4866-RFP-P-004	FIT-4201	FIT-4201	RO Bypass Flow Mag Meter	CP-4000 - MTU RIO Panel	Power	2-#14, #14 Ground	Power Supply	24VDC	Water Treatment Plant	E&H Promag 10
						Flow Rate	2PR-18GA, Twisted, Shielded	Analog 4-20mA	-		
						Flow Quantity		24VDC Disc Pulse	-		
MTU-PID-001	4866-RFP-P-004	FCV-4102	FCV-4102	RO Bypass Control Valve	CP-4000 - MTU RIO Panel	Power	2-#14, #14 Ground	Power Supply	120VAC	Water Treatment Plant	Bray Electric w/ servo kit
						Analog signal	1 PR-18GA, Twisted, Shielded	Analog 4-20mA	-		
						Closed Status	2-#18	120VAC Disc. Contact In	-		
CHEM-PID-001	4866-RFP-P-005	PMP-5010-1	KMN-1101	Oxidant Dosing Pump 1	CP-3000 - MTU PLC Panel	AC receptacle Power	2-#14, #14 Ground	Power Supply	120VAC	Chemical Room	Grundfos DDA
						Enable Command	6-#18	Contact Out	-		
						Pulse Command		Contact Out	-		
						Fault Status		24VDC Disc. Contact In	-		
						Flow Indication	1 PR-18GA, Twisted, Shielded	Analog 4-20mA	-		
CHEM-PID-001	4866-RFP-P-005	PMP-5010-2	KMN-1102	Oxidant Dosing Pump 2	CP-3000 - MTU PLC Panel	AC receptacle Power	2-#14, #14 Ground	Power Supply	120VAC	Chemical Room	Grundfos DDA
						Enable Command	6-#18	Contact Out	-		
						Pulse Command		Contact Out	-		
						Fault Status		24VDC Disc. Contact In	-		
						Flow Indication	1 PR-18GA, Twisted, Shielded	Analog 4-20mA	-		
CHEM-PID-001	4866-RFP-P-005	PMP-5310-1	ASC-3201	Anti-Scalant Dosing Pump 1	CP-3000 - MTU PLC Panel	AC receptacle Power	2-#14, #14 Ground	Power Supply	120VAC	Chemical Room	Grundfos DDA
						Enable Command	6-#18	Contact Out	-		
						Pulse Command		Contact Out	-		
						Fault Status		24VDC Disc. Contact In	-		
						Flow Indication	1 PR-18GA, Twisted, Shielded	Analog 4-20mA	-		
CHEM-PID-001	4866-RFP-P-005	PMP-5310-2	ASC-3202	Anti-Scalant Dosing Pump 2	CP-3000 - MTU PLC Panel	AC receptacle Power	2-#14, #14 Ground	Power Supply	120VAC	Chemical Room	Grundfos DDA
						Enable Command	6-#18	Contact Out	-		
						Pulse Command		Contact Out	-		
						Fault Status		24VDC Disc. Contact In	-		
						Flow Indication	1 PR-18GA, Twisted, Shielded	Analog 4-20mA	-		

4162970 - TOWN OF RUSSELL WTP - FIELD WIRING SCHEDULE

Note: This schedule lists all known field connections, except for connections between CP-1000 WTP PLC Panel and various connections not fully specified in RFP: Field instruments and valves to be supplied by General Contractor, MCC connections for motor control/status, automatic transfer switch status, generator status, and any other connections that are unspecified in the RFP.

DELCO P&ID	AE P&ID	Delco Tag	AE Tag	End 1 (Device)	End 2	Signal	Cabling	Signal Type	Power	Device Location (Approximate)	Model
CHEM-PID-001	4866-RFP-P-005	PMP-5710-1	SBS-3101	Reducing Agent Dosing Pump 1	CP-3000 - MTU PLC Panel	AC receptacle Power	2-#14, #14 Ground	Power Supply	120VAC	Chemical Room	Grundfos DDA
						Enable Command	6-#18	Contact Out	-		
						Pulse Command		Contact Out	-		
						Fault Status		24VDC Disc. Contact In	-		
						Flow Indication	1 PR-18GA, Twisted, Shielded	Analog 4-20mA	-		
CHEM-PID-001	4866-RFP-P-005	PMP-5710-2	SBS-3102	Reducing Agent Dosing Pump 2	CP-3000 - MTU PLC Panel	AC receptacle Power	2-#14, #14 Ground	Power Supply	120VAC	Chemical Room	Grundfos DDA
						Enable Command	6-#18	Contact Out	-		
						Pulse Command		Contact Out	-		
						Fault Status		24VDC Disc. Contact In	-		
						Flow Indication	1 PR-18GA, Twisted, Shielded	Analog 4-20mA	-		
CHEM-PID-001	4866-RFP-P-005	PMP-5710-3	SBS-6101	Reducing Agent Dosing Pump 3	CP-3000 - MTU PLC Panel	AC receptacle Power	2-#14, #14 Ground	Power Supply	120VAC	Chemical Room	Grundfos DDA
						Enable Command	6-#18	Contact Out	-		
						Pulse Command		Contact Out	-		
						Fault Status		24VDC Disc. Contact In	-		
						Flow Indication	1 PR-18GA, Twisted, Shielded	Analog 4-20mA	-		
CHEM-PID-001	N/A	PMP-5711	N/A	Reducing Agent Dosing Pump 4	CP-3000 - MTU PLC Panel	AC receptacle Power	2-#14, #14 Ground	Power Supply	120VAC	Chemical Room	Grundfos DDA
						Enable Command	6-#18	Contact Out	-		
						Pulse Command		Contact Out	-		
						Fault Status		24VDC Disc. Contact In	-		
CHEM-PID-001	4866-RFP-P-005	PMP-5410-1	CAU-5101	Caustic Dosing Pump 1	CP-3000 - MTU PLC Panel	AC receptacle Power	2-#14, #14 Ground	Power Supply	120VAC	Chemical Room	Grundfos DDA
						Enable Command	6-#18	Contact Out	-		
						Pulse Command		Contact Out	-		
						Fault Status		24VDC Disc. Contact In	-		
						Flow Indication	1 PR-18GA, Twisted, Shielded	Analog 4-20mA	-		
CHEM-PID-001	4866-RFP-P-005	PMP-5410-2	CAU-5102	Caustic Dosing Pump 2	CP-3000 - MTU PLC Panel	AC receptacle Power	2-#14, #14 Ground	Power Supply	120VAC	Chemical Room	Grundfos DDA
						Enable Command	6-#18	Contact Out	-		
						Pulse Command		Contact Out	-		
						Fault Status		24VDC Disc. Contact In	-		
						Flow Indication	1 PR-18GA, Twisted, Shielded	Analog 4-20mA	-		
CHEM-PID-001	N/A	PMP-5411	N/A	Caustic Dosing Pump 3	CP-3000 - MTU PLC Panel	AC receptacle Power	2-#14, #14 Ground	Power Supply	120VAC	Chemical Room	Grundfos DDA
						Enable Command	6-#18	Contact Out	-		
						Pulse Command		Contact Out	-		
						Fault Status		24VDC Disc. Contact In	-		

4162970 - TOWN OF RUSSELL WTP - FIELD WIRING SCHEDULE

Note: This schedule lists all known field connections, except for connections between CP-1000 WTP PLC Panel and various connections not fully specified in RFP: Field instruments and valves to be supplied by General Contractor, MCC connections for motor control/status, automatic transfer switch status, generator status, and any other connections that are unspecified in the RFP.

DELCO P&ID	AE P&ID	Delco Tag	AE Tag	End 1 (Device)	End 2	Signal	Cabling	Signal Type	Power	Device Location (Approximate)	Model
CHEM-PID-001	4866-RFP-P-005	PMP-5610-1	CDP-5201	Disinfectant Dosing Pump 1	CP-3000 - MTU PLC Panel	AC receptacle Power	2-#14, #14 Ground	Power Supply	120VAC	Chemical Room	Grundfos DDA
						Enable Command	6-#18	Contact Out	-		
						Pulse Command		Contact Out	-		
						Fault Status		24VDC Disc. Contact In	-		
						Flow Indication	1 PR-18GA, Twisted, Shielded	Analog 4-20mA	-		
CHEM-PID-001	4866-RFP-P-005	PMP-5610-2	CDP-5202	Disinfectant Dosing Pump 2	CP-3000 - MTU PLC Panel	AC receptacle Power	2-#14, #14 Ground	Power Supply	120VAC	Chemical Room	Grundfos DDA
						Enable Command	6-#18	Contact Out	-		
						Pulse Command		Contact Out	-		
						Fault Status		24VDC Disc. Contact In	-		
						Flow Indication	1 PR-18GA, Twisted, Shielded	Analog 4-20mA	-		
CHEM-PID-001	4866-RFP-P-005	PMP-5810	CIH-5301	Corrosion Inhibitor Dosing Pump	CP-3000 - MTU PLC Panel	AC receptacle Power	2-#14, #14 Ground	Power Supply	120VAC	Chemical Room	Grundfos DDA
						Enable Command	6-#18	Contact Out	-		
						Pulse Command		Contact Out	-		
						Fault Status		24VDC Disc. Contact In	-		
						Flow Indication	1 PR-18GA, Twisted, Shielded	Analog 4-20mA	-		
CHEM-PID-001	4866-RFP-P-005	PMP-5910-1	FLU-5401	Fluoride Dosing Pump 1	CP-3000 - MTU PLC Panel	AC receptacle Power	2-#14, #14 Ground	Power Supply	120VAC	Chemical Room	Grundfos DDA
						Enable Command	6-#18	Contact Out	-		
						Pulse Command		Contact Out	-		
						Fault Status		24VDC Disc. Contact In	-		
						Flow Indication	1 PR-18GA, Twisted, Shielded	Analog 4-20mA	-		
CHEM-PID-001	4866-RFP-P-005	PMP-5910-2	FLU-5402	Fluoride Dosing Pump 2	CP-3000 - MTU PLC Panel	AC receptacle Power	2-#14, #14 Ground	Power Supply	120VAC	Chemical Room	Grundfos DDA
						Enable Command	6-#18	Contact Out	-		
						Pulse Command		Contact Out	-		
						Fault Status		24VDC Disc. Contact In	-		
						Flow Indication	1 PR-18GA, Twisted, Shielded	Analog 4-20mA	-		
CHEM-PID-001	4866-RFP-P-005	MIX-5002	MX-1103	Oxidant Tank Mixer MX-5002	120VAC Building Circuit	Power	2-#14, #14 Ground	Power Supply	120VAC	Oxidant Tank	TBD
CIP-PID-001	4866-RFP-P-005	LSH-6019	LSH-3910	CIP Tank High Level Switch	CP-4000 - MTU RIO Panel	High Level Status	4-#18	24VDC Disc. Contact In	-	CIP Tank	MDI Float Switch
CIP-PID-001	4866-RFP-P-005	LSL-6020	LSL-3909	CIP Tank Low Level Switch	CP-4000 - MTU RIO Panel	Low Level Status	4-#18	24VDC Disc. Contact In	-	CIP Tank	MDI Float Switch
CIP-PID-001	N/A	AIT-6085	N/A	CIP pH Sensor	AIT-4000F (Hach SC1000) - MTU Train 2	pH Level Indication	Hach Analytical Controller Instrument Extension Cable (Supplied by Delco)	Digital	-	CIP Skid	pH Sensor To Hach SC1000
CIP-PID-001	N/A	TT-6087	N/A	CIP Temperature Sensor	CP-4000 - MTU RIO Panel	Temp Indication	1 PR-18GA, Twisted, Shielded	Analog 4-20mA	Loop Powered	CIP Skid	E&H TMR31
FTR-PID-001	4866-RFP-P-003	FV-1105	FV-1105	Raw Water Sampling Instruments Solenoid Valve	CP-2000 - Filter PLC Panel	Open Command	2-#14	120VAC Disc. Out	-	Greensand Filter Area	EWP 120VAC Coil
FTR-PID-001	4866-RFP-P-003	AIT-1101	AIT-1101	Instrument Raw Water Turbidity Meter	AIT-2000 (Hach SC1000) - Green Sand Filter Area	Turbidity Level Indication	Hach Analytical Controller Instrument Extension Cable (Supplied by Delco)	Digital	-	Greensand Filter Area	Ultraturb Turbidity Sensor To Hach SC1000

4162970 - TOWN OF RUSSELL WTP - FIELD WIRING SCHEDULE

Note: This schedule lists all known field connections, except for connections between CP-1000 WTP PLC Panel and various connections not fully specified in RFP: Field instruments and valves to be supplied by General Contractor, MCC connections for motor control/status, automatic transfer switch status, generator status, and any other connections that are unspecified in the RFP.

DELCO P&ID	AE P&ID	Delco Tag	AE Tag	End 1 (Device)	End 2	Signal	Cabling	Signal Type	Power	Device Location (Approximate)	Model
FTR-PID-001	4866-RFP-P-003	FIT-1101	FIT-1101	Raw Water Flow Meter	CP-2000 - Filter PLC Panel	Power	2-#14, #14 Ground	Power Supply	24VDC	Greensand Filter Area	E&H Promag 10
						Flow Rate	2PR-18GA, Twisted, Shielded	Analog 4-20mA	-		
						Flow Quantity		24VDC Disc Pulse	-		
FTR-PID-001	N/A	AIT-2007	N/A	FTR Feed ORP Sensor	AIT-2000 (Hach SC1000) - Green Sand Filter Area	ORP Level Indication	Hach Analytical Controller Instrument Extension Cable (Supplied by Delco)	Digital	-	Greensand Filter Area	ORP Sensor To Hach SC1000
FTR-PID-001	4866-RFP-P-003	FV-2101	FV-2101	FTR 1 Vessel Inlet Automated Valve	CP-2000 - Filter PLC Panel	Open Status	3-#18	120VAC Disc. Contact In	-	Greensand Filter Area	Bray Series 70 Electric
						Closed Status		120VAC Disc. Contact In	-		
						Open Command	3-#14	120VAC Disc. Out	-		
						Close Command		120VAC Disc. Out	-		
FTR-PID-001	4866-RFP-P-003	FV-2104	FV-2104	FTR 1 Backwash Outlet Automated Valve	CP-2000 - Filter PLC Panel	Open Status	3-#18	120VAC Disc. Contact In	-	Greensand Filter Area	Bray Series 70 Electric
						Closed Status		120VAC Disc. Contact In	-		
						Open Command	3-#14	120VAC Disc. Out	-		
						Close Command		120VAC Disc. Out	-		
FTR-PID-001	4866-RFP-P-003	PT-2110	PIT-2110	FTR 1 Vessel Inlet Pressure Transmitter	CP-2000 - Filter PLC Panel	Pressure Indication	1 PR-18GA, Twisted, Shielded	Analog 4-20mA	Loop Powered	Greensand Filter Area	Ashcroft G27
FTR-PID-001	4866-RFP-P-003	FV-2105	FV-2105	FTR 1 Vessel Drain Automated Valve	CP-2000 - Filter PLC Panel	Open Status	3-#18	120VAC Disc. Contact In	-	Greensand Filter Area	Bray Series 70 Electric
						Closed Status		120VAC Disc. Contact In	-		
						Open Command	3-#14	120VAC Disc. Out	-		
						Close Command		120VAC Disc. Out	-		
FTR-PID-001	4866-RFP-P-003	FV-2120	FV-2120	FTR 1 Air Scour Inlet Automated Valve	CP-2000 - Filter PLC Panel	Open Status	3-#18	120VAC Disc. Contact In	-	Greensand Filter Area	Bray Series 70 Electric
						Closed Status		120VAC Disc. Contact In	-		
						Open Command	3-#14	120VAC Disc. Out	-		
						Close Command		120VAC Disc. Out	-		
FTR-PID-001	4866-RFP-P-003	PT-2111	PIT-2111	FTR 1 Vessel Outlet Pressure Transmitter	CP-2000 - Filter PLC Panel	Pressure Indication	1 PR-18GA, Twisted, Shielded	Analog 4-20mA	Loop Powered	Greensand Filter Area	Ashcroft G27
FTR-PID-001	4866-RFP-P-003	FV-2151	FV-2151	FTR 1 Filtrate Sampling Instruments Feed Valve	CP-2000 - Filter PLC Panel	Open Command	2-#14	120VAC Disc. Out	-	Greensand Filter Area	EWP 120VAC Coil
FTR-PID-001	4866-RFP-P-003	AIT-2105	AIT-2105	FTR 1 Filtrate Turbidity Meter	AIT-2000 (Hach SC1000) - Green Sand Filter Area	Turbidity Level Indication	Hach Analytical Controller Instrument Extension Cable (Supplied by Delco)	Digital	-	Greensand Filter Area	Ultraturb Turbidity Sensor To Hach SC1000
FTR-PID-001	4866-RFP-P-003	FV-2106	FV-2106	FTR 1 Backwash Inlet Automated Valve	CP-2000 - Filter PLC Panel	Open Status	3-#18	120VAC Disc. Contact In	-	Greensand Filter Area	Bray Series 70 Electric
						Closed Status		120VAC Disc. Contact In	-		
						Open Command	3-#14	120VAC Disc. Out	-		
						Close Command		120VAC Disc. Out	-		

4162970 - TOWN OF RUSSELL WTP - FIELD WIRING SCHEDULE

Note: This schedule lists all known field connections, except for connections between CP-1000 WTP PLC Panel and various connections not fully specified in RFP: Field instruments and valves to be supplied by General Contractor, MCC connections for motor control/status, automatic transfer switch status, generator status, and any other connections that are unspecified in the RFP.

DELCO P&ID	AE P&ID	Delco Tag	AE Tag	End 1 (Device)	End 2	Signal	Cabling	Signal Type	Power	Device Location (Approximate)	Model
FTR-PID-001	4866-RFP-P-003	FIT-2101	FIT-2101	FTR 1 Vessel Outlet Flow Meter	CP-2000 - Filter PLC Panel	Power	2-#14, #14 Ground	Power Supply	24VDC	Greensand Filter Area	E&H Promag 10
						Flow Rate	2PR-18GA, Twisted, Shielded	Analog 4-20mA	-		
						Flow Quantity		24VDC Disc Pulse	-		
FTR-PID-001	4866-RFP-P-003	FCV-2110	FCV-2110	FTR 1 Vessel Outlet Control Valve	CP-4000 - MTU RIO Panel	Power	2-#14, #14 Ground	Power Supply	120VAC	Water Treatment Plant	Bray Electric w/ servo kit
						Analog signal	1 PR-18GA, Twisted, Shielded	Analog 4-20mA	-		
						Closed Status	2-#18	120VAC Disc. Contact In	-		
FTR-PID-001	4866-RFP-P-003	FV-2107	FV-2107	FTR 1 Forward Flush Outlet Automated Valve	CP-2000 - Filter PLC Panel	Open Status	3-#18	120VAC Disc. Contact In	-	Greensand Filter Area	Bray Series 70 Electric
						Closed Status		120VAC Disc. Contact In	-		
						Open Command	3-#14	120VAC Disc. Out	-		
						Close Command		120VAC Disc. Out	-		
FTR-PID-001	4866-RFP-P-003	FV-2201	FV-2201	FTR 2 Vessel Inlet Automated Valve	CP-2000 - Filter PLC Panel	Open Status	3-#18	120VAC Disc. Contact In	-	Greensand Filter Area	Bray Series 70 Electric
						Closed Status		120VAC Disc. Contact In	-		
						Open Command	3-#14	120VAC Disc. Out	-		
						Close Command		120VAC Disc. Out	-		
FTR-PID-001	4866-RFP-P-003	FV-2204	FV-2204	FTR 2 Backwash Outlet Automated Valve	CP-2000 - Filter PLC Panel	Open Status	3-#18	120VAC Disc. Contact In	-	Greensand Filter Area	Bray Series 70 Electric
						Closed Status		120VAC Disc. Contact In	-		
						Open Command	3-#14	120VAC Disc. Out	-		
						Close Command		120VAC Disc. Out	-		
FTR-PID-001	4866-RFP-P-003	PT-2210	PIT-2210	FTR 2 Vessel Inlet Pressure Transmitter	CP-2000 - Filter PLC Panel	Pressure Indication	1 PR-18GA, Twisted, Shielded	Analog 4-20mA	Loop Powered	Greensand Filter Area	Ashcroft G27
FTR-PID-001	4866-RFP-P-003	FV-2205	FV-2205	FTR 2 Vessel Drain Automated Valve	CP-2000 - Filter PLC Panel	Open Status	3-#18	120VAC Disc. Contact In	-	Greensand Filter Area	Bray Series 70 Electric
						Closed Status		120VAC Disc. Contact In	-		
						Open Command	3-#14	120VAC Disc. Out	-		
						Close Command		120VAC Disc. Out	-		
FTR-PID-001	4866-RFP-P-003	FV-2220	FV-2220	FTR 2 Air Scour Inlet Automated Valve	CP-2000 - Filter PLC Panel	Open Status	3-#18	120VAC Disc. Contact In	-	Greensand Filter Area	Bray Series 70 Electric
						Closed Status		120VAC Disc. Contact In	-		
						Open Command	3-#14	120VAC Disc. Out	-		
						Close Command		120VAC Disc. Out	-		
FTR-PID-001	4866-RFP-P-003	PT-2211	PIT-2211	FTR 2 Vessel Outlet Pressure Transmitter	CP-2000 - Filter PLC Panel	Pressure Indication	1 PR-18GA, Twisted, Shielded	Analog 4-20mA	Loop Powered	Greensand Filter Area	Ashcroft G27
FTR-PID-001	4866-RFP-P-003	FV-2251	FV-2251	FTR 2 Filtrate Sampling Instruments Feed Valve	CP-2000 - Filter PLC Panel	Open Command	2-#14	120VAC Disc. Out	-	Greensand Filter Area	EWP 120VAC Coil
FTR-PID-001	4866-RFP-P-003	AIT-2205	AIT-2205	FTR 2 Filtrate Turbidity Meter	AIT-2000 (Hach SC1000) - Green Sand Filter Area	Turbidity Level Indication	Hach Analytical Controller Instrument Extension Cable (Supplied by Delco)	Digital	-	Greensand Filter Area	Ultraturb Turbidity Sensor To Hach SC1000

4162970 - TOWN OF RUSSELL WTP - FIELD WIRING SCHEDULE

Note: This schedule lists all known field connections, except for connections between CP-1000 WTP PLC Panel and various connections not fully specified in RFP: Field instruments and valves to be supplied by General Contractor, MCC connections for motor control/status, automatic transfer switch status, generator status, and any other connections that are unspecified in the RFP.

DELCO P&ID	AE P&ID	Delco Tag	AE Tag	End 1 (Device)	End 2	Signal	Cabling	Signal Type	Power	Device Location (Approximate)	Model
FTR-PID-001	4866-RFP-P-003	FV-2206	FV-2206	FTR 2 Backwash Inlet Automated Valve	CP-2000 - Filter PLC Panel	Open Status	3-#18	120VAC Disc. Contact In	-	Greensand Filter Area	Bray Series 70 Electric
						Closed Status		120VAC Disc. Contact In	-		
						Open Command	3-#14	120VAC Disc. Out	-		
						Close Command		120VAC Disc. Out	-		
FTR-PID-001	4866-RFP-P-003	FIT-2201	FIT-2201	FTR 2 Vessel Outlet Flow Meter	CP-2000 - Filter PLC Panel	Power	2-#14, #14 Ground	Power Supply	24VDC	Greensand Filter Area	E&H Promag 10
						Flow Rate	2PR-18GA, Twisted, Shielded	Analog 4-20mA	-		
						Flow Quantity		24VDC Disc Pulse	-		
FTR-PID-001	4866-RFP-P-003	FCV-2210	FCV-2210	FTR 2 Vessel Outlet Control Valve	CP-4000 - MTU RIO Panel	Power	2-#14, #14 Ground	Power Supply	120VAC	Water Treatment Plant	Bray Electric w/ servo kit
						Analog signal	1 PR-18GA, Twisted, Shielded	Analog 4-20mA	-		
						Closed Status	2-#18	120VAC Disc. Contact In	-		
FTR-PID-001	4866-RFP-P-003	FV-2207	FV-2207	FTR 2 Forward Flush Outlet Automated Valve	CP-2000 - Filter PLC Panel	Open Status	3-#18	120VAC Disc. Contact In	-	Greensand Filter Area	Bray Series 70 Electric
						Closed Status		120VAC Disc. Contact In	-		
						Open Command	3-#14	120VAC Disc. Out	-		
						Close Command		120VAC Disc. Out	-		
FTR-PID-001	4866-RFP-P-003	FV-2301	FV-2301	FTR 3 Vessel Inlet Automated Valve	CP-2000 - Filter PLC Panel	Open Status	3-#18	120VAC Disc. Contact In	-	Greensand Filter Area	Bray Series 70 Electric
						Closed Status		120VAC Disc. Contact In	-		
						Open Command	3-#14	120VAC Disc. Out	-		
						Close Command		120VAC Disc. Out	-		
FTR-PID-001	4866-RFP-P-003	FV-2304	FV-2304	FTR 3 Backwash Outlet Automated Valve	CP-2000 - Filter PLC Panel	Open Status	3-#18	120VAC Disc. Contact In	-	Greensand Filter Area	Bray Series 70 Electric
						Closed Status		120VAC Disc. Contact In	-		
						Open Command	3-#14	120VAC Disc. Out	-		
						Close Command		120VAC Disc. Out	-		
FTR-PID-001	4866-RFP-P-003	PT-2310	PIT-2310	FTR 3 Vessel Inlet Pressure Transmitter	CP-2000 - Filter PLC Panel	Pressure Indication	1 PR-18GA, Twisted, Shielded	Analog 4-20mA	Loop Powered	Greensand Filter Area	Ashcroft G27
FTR-PID-001	4866-RFP-P-003	FV-2305	FV-2305	FTR 3 Vessel Drain Automated Valve	CP-2000 - Filter PLC Panel	Open Status	3-#18	120VAC Disc. Contact In	-	Greensand Filter Area	Bray Series 70 Electric
						Closed Status		120VAC Disc. Contact In	-		
						Open Command	3-#14	120VAC Disc. Out	-		
						Close Command		120VAC Disc. Out	-		

4162970 - TOWN OF RUSSELL WTP - FIELD WIRING SCHEDULE

Note: This schedule lists all known field connections, except for connections between CP-1000 WTP PLC Panel and various connections not fully specified in RFP: Field instruments and valves to be supplied by General Contractor, MCC connections for motor control/status, automatic transfer switch status, generator status, and any other connections that are unspecified in the RFP.

DELCO P&ID	AE P&ID	Delco Tag	AE Tag	End 1 (Device)	End 2	Signal	Cabling	Signal Type	Power	Device Location (Approximate)	Model
FTR-PID-001	4866-RFP-P-003	FV-2320	FV-2320	FTR 3 Air Scour Inlet Automated Valve	CP-2000 - Filter PLC Panel	Open Status	3-#18	120VAC Disc. Contact In	-	Greensand Filter Area	Bray Series 70 Electric
						Closed Status		120VAC Disc. Contact In	-		
						Open Command	3-#14	120VAC Disc. Out	-		
						Close Command		120VAC Disc. Out	-		
FTR-PID-001	4866-RFP-P-003	PT-2311	PIT-2311	FTR 3 Vessel Outlet Pressure Transmitter	CP-2000 - Filter PLC Panel	Pressure Indication	1 PR-18GA, Twisted, Shielded	Analog 4-20mA	Loop Powered	Greensand Filter Area	Ashcroft G27
FTR-PID-001	4866-RFP-P-003	FV-2351	FV-2351	FTR 3 Filtrate Sampling Instruments Feed Valve	CP-2000 - Filter PLC Panel	Open Command	2-#14	120VAC Disc. Out	-	Greensand Filter Area	EWP 120VAC Coil
FTR-PID-001	4866-RFP-P-003	AIT-2305	AIT-2305	FTR 3 Filtrate Turbidity Meter	AIT-2000 (Hach SC1000) - Green Sand Filter Area	Turbidity Level Indication	Hach Analytical Controller Instrument Extension Cable (Supplied by Delco)	Digital	-	Greensand Filter Area	Ultraturb Turbidity Sensor To Hach SC1000
FTR-PID-001	4866-RFP-P-003	FV-2306	FV-2306	FTR 3 Backwash Inlet Automated Valve	CP-2000 - Filter PLC Panel	Open Status	3-#18	120VAC Disc. Contact In	-	Greensand Filter Area	Bray Series 70 Electric
						Closed Status		120VAC Disc. Contact In	-		
						Open Command	3-#14	120VAC Disc. Out	-		
						Close Command		120VAC Disc. Out	-		
FTR-PID-001	4866-RFP-P-003	FIT-2301	FIT-2301	FTR 3 Vessel Outlet Flow Meter	CP-2000 - Filter PLC Panel	Power	2-#14, #14 Ground	Power Supply	24VDC	Greensand Filter Area	E&H Promag 10
						Flow Rate	2PR-18GA, Twisted, Shielded	Analog 4-20mA	-		
						Flow Quantity		24VDC Disc Pulse	-		
FTR-PID-001	4866-RFP-P-003	FCV-2310	FCV-2310	FTR 3 Vessel Outlet Control Valve	CP-4000 - MTU RIO Panel	Power	2-#14, #14 Ground	Power Supply	120VAC	Greensand Filter Area	Bray Electric w/ servo kit
						Analog signal	1 PR-18GA, Twisted, Shielded	Analog 4-20mA	-		
						Closed Status	2-#18	120VAC Disc. Contact In	-		
FTR-PID-001	4866-RFP-P-003	FV-2307	FV-2307	FTR 3 Forward Flush Outlet Automated Valve	CP-2000 - Filter PLC Panel	Open Status	3-#18	120VAC Disc. Contact In	-	Greensand Filter Area	Bray Series 70 Electric
						Closed Status		120VAC Disc. Contact In	-		
						Open Command	3-#14	120VAC Disc. Out	-		
						Close Command		120VAC Disc. Out	-		
FTR-PID-001	N/A	AIT-2722	N/A	FTR Filtrate ORP Sensor	AIT-2000 (Hach SC1000) - Green Sand Filter Area	ORP Level Indication	Hach Analytical Controller Instrument Extension Cable (Supplied by Delco)	Digital	-	Greensand Filter Area	ORP Sensor To Hach SC1000
FTR-PID-001	4866-RFP-P-003	N/A	BUV-1101	Ioslation on Raw Automated Valve	CP-2000 - Filter PLC Panel	Open Status	3-#18	120VAC Disc. Contact In	-	Greensand Filter Area	Bray Series 70 Electric (Assumed, Valve Supplied by GC)
						Closed Status		120VAC Disc. Contact In	-		
						Open Command	3-#14	120VAC Disc. Out	-		
						Close Command		120VAC Disc. Out	-		
FTR-PID-001	4866-RFP-P-003	N/A	FIT-2701	Backwash Pump Flow Meter	CP-2000 - Filter PLC Panel	Power	2-#14, #14 Ground	Power Supply	24VDC	Greensand Filter Area	E&H Promag 10 (Assumed, Magmeter Supplied by GC)
						Flow Rate	2PR-18GA, Twisted, Shielded	Analog 4-20mA	-		
						Flow Quantity		24VDC Disc Pulse	-		

4162970 - TOWN OF RUSSELL WTP - FIELD WIRING SCHEDULE

Note: This schedule lists all known field connections, except for connections between CP-1000 WTP PLC Panel and various connections not fully specified in RFP: Field instruments and valves to be supplied by General Contractor, MCC connections for motor control/status, automatic transfer switch status, generator status, and any other connections that are unspecified in the RFP.

DELCO P&ID	AE P&ID	Delco Tag	AE Tag	End 1 (Device)	End 2	Signal	Cabling	Signal Type	Power	Device Location (Approximate)	Model
N/A	N/A	N/A	N/A	SCADA PC Workstation	CP-1000 - WTP PLC Panel	Network	Cat 6 Ethernet Cable	Communications	-	Office	Tower PC
N/A	N/A	N/A	N/A	Office Printer	CP-1000 - WTP PLC Panel	Network	Cat 6 Ethernet Cable	Communications	-	Office	Printer
N/A	N/A	N/A	N/A	SCADA Sonicwall	CP-1000 - WTP PLC Panel	Network	Cat 6 Ethernet Cable	Communications	-	Office	Sonicwall
N/A	N/A	N/A	N/A	SCADA UPS	120VAC Building Circuit	Power	2-#14, #14 Ground	Power Supply	120VAC	Office	Tower UPS
N/A	N/A	N/A	N/A	Internet Modem	SCADA Sonicwall	Network	Cat 6 Ethernet Cable	Communications	-	Telephone Backboard	
N/A	N/A	N/A	N/A	Telephone Line	CP-1000 - WTP PLC Panel	Telephone	Telephone Cable	Communications	-	Telephone Backboard	
N/A	N/A	CP-1000	N/A	WTP PLC Panel	120VAC Building Circuit	Power	2-#14, #14 Ground	Power Supply	120VAC	Electrical Room	Delco PLC Panel
N/A	N/A	CP-2000	N/A	Filter PLC Panel	CP-1000 - WTP PLC Panel	Network	Cat 6 Ethernet Cable	Communications	-	Greensand Filter Area	Delco PLC Panel
N/A	N/A	CP-2000	N/A	Filter PLC Panel	120VAC Building Circuit	Power	2-#14, #14 Ground	Power Supply	120VAC	Greensand Filter Area	Delco PLC Panel
					120VAC Building Circuit	Power	2-#14, #14 Ground	Power Supply	120VAC		
N/A	N/A	PP-2100	N/A	Greensand Filter Power Panel	MCC	Power	3c Cable for 100A Service	Power Supply	600VAC	Greensand Filter Area	Delco Power Panel
N/A	N/A	N/A	N/A	Greensand Filter Power Panel PP-2100 Phase Monitor Relay	CP-2000 - Filter PLC Panel	Phase Loss/Failure	2-#18	24VDC Disc. Contact In	-	Greensand Filter Area	Carlo Gavazzi DPA Relay
N/A	N/A	BWP-2001	BWP-2001	Backwash Pump	Greensand Filter Power Panel PP-2100	Power	3c Cable for 40HP Motor	Power Supply	600VAC	Water Treatment Plant	575VAC, 3P Motor
N/A	N/A	N/A	N/A	Backwash Pump BWP-2001 VFD	CP-2000 - Filter PLC Panel	Run Status	8-#18	24VDC Disc. Contact In	-	Greensand Filter Power Panel PP-2100	Altivar 61 (Assumption: All Control is Hardwired)
						Fault Status		24VDC Disc. Contact In	-		
						Auto Status		24VDC Disc. Contact In	-		
						Run Command		Contact Out	-		
						Speed Command	2 PR-18GA, Twisted, Shielded	Analog 4-20mA	-		
						Speed Status		Analog 4-20mA	-		
FTR-PID-001	N/A	BLR-2400	N/A	Air Blower	PP-2100 - Greensand Filter Power Panel	Power	3c Cable for 15HP Motor	Power Supply	600VAC	Water Treatment Plant	575VAC, 3P Motor
N/A	N/A	N/A	N/A	Air Blower BLR-2400 Starter Controls	CP-2000 - Filter PLC Panel	Run Status	8-#18	24VDC Disc. Contact In	-	Greensand Filter Power Panel PP-2100	GV2P Breaker and LC1D Contactor
						Fault Status		24VDC Disc. Contact In	-		
						Auto Status		24VDC Disc. Contact In	-		
						Run Command		Contact Out	-		
N/A	N/A	CP-3000	N/A	MTU PLC Panel	CP-1000 - WTP PLC Panel	Network	Cat 6 Ethernet Cable	Communications	-	MTU Skid Train 1	Delco PLC Panel
N/A	N/A	CP-3000	N/A	MTU PLC Panel	3 x 120VAC Building Circuit	Power	4-#14, #14 Ground	Power Supply	208VAC 3P	MTU Skid Train 1	Delco PLC Panel
N/A	N/A	CP-4000	N/A	MTU RIO Panel	CP-3000 - MTU PLC Panel	Network	Cat 6 Ethernet Cable	KVM Extender	-	MTU Skid Train 2	Delco PLC Panel
N/A	N/A	CP-4000	N/A	MTU RIO Panel	CP-3000 - MTU PLC Panel	M340 Rack Extension	BMXXBC050K M340 Rack Extension Cable (Supplied by Delco)	M340	-	MTU Skid Train 2	Delco PLC Panel
N/A	N/A	CP-4000	N/A	MTU RIO Panel	CP-3000 - MTU PLC Panel	120VAC Power	6-#14, #14 Ground	Power Supply	120VAC	MTU Skid Train 2	Delco PLC Panel
N/A	N/A	CP-4000	N/A	MTU RIO Panel	CP-3000 - MTU PLC Panel	120VAC Filtered Power		Power Supply	120VAC	MTU Skid Train 2	Delco PLC Panel
N/A	N/A	CP-4000	N/A	MTU RIO Panel	CP-3000 - MTU PLC Panel	120VAC UPS Power		Power Supply	120VAC	MTU Skid Train 2	Delco PLC Panel
N/A	N/A	CP-4000	N/A	MTU RIO Panel	CP-3000 - MTU PLC Panel	24VDC Power	2-#14	Power Supply	24VDC	MTU Skid Train 2	Delco PLC Panel
N/A	N/A	PP-3100	N/A	MTU & CIP Power Panel	MCC	Power	3c Cable for 200A Service	Power Supply	600VAC	MTU/CIP Area	Delco Power Panel
N/A	N/A	N/A	N/A	MTU & CIP Power Panel PP-3100 Phase Monitor Relay	CP-3000 - MTU PLC Panel	Phase Loss/Failure	2-#18	24VDC Disc. Contact In	-	MTU/CIP Area	Carlo Gavazzi DPA Relay
MTU-PID-001	4866-RFP-P-004	PMP-4050-1	N/A	MTU Feed Pump 1	PP-3100 - MTU & CIP Power Panel	Power	3c Cable for 40HP Motor	Power Supply	600VAC	MTU Skid Train 1	575VAC, 3P Motor

4162970 - TOWN OF RUSSELL WTP - FIELD WIRING SCHEDULE

Note: This schedule lists all known field connections, except for connections between CP-1000 WTP PLC Panel and various connections not fully specified in RFP: Field instruments and valves to be supplied by General Contractor, MCC connections for motor control/status, automatic transfer switch status, generator status, and any other connections that are unspecified in the RFP.

DELCO P&ID	AE P&ID	Delco Tag	AE Tag	End 1 (Device)	End 2	Signal	Cabling	Signal Type	Power	Device Location (Approximate)	Model
N/A	N/A	N/A	N/A	MTU Feed Pump 1 PMP-4050-1 VFD	CP-3000 - MTU PLC Panel	Run Status	8-#18	24VDC Disc. Contact In	-	MTU & CIP Power Panel PP-3100	Altivar 61 (Assumption: All Control is Hardwired)
						Fault Status		24VDC Disc. Contact In	-		
						Auto Status		24VDC Disc. Contact In	-		
						Run Command		Contact Out	-		
						Speed Command	2 PR-18GA, Twisted, Shielded	Analog 4-20mA	-		
						Speed Status		Analog 4-20mA	-		
MTU-PID-001	4866-RFP-P-004	PMP-4050-2	N/A	MTU Feed Pump 2	PP-3100 - MTU & CIP Power Panel	Power	3c Cable for 40HP Motor	Power Supply	600VAC	MTU Skid Train 2	575VAC, 3P Motor
N/A	N/A	N/A	N/A	MTU Feed Pump 2 PMP-4050-2 VFD	CP-3000 - MTU PLC Panel	Run Status	8-#18	24VDC Disc. Contact In	-	MTU & CIP Power Panel PP-3100	Altivar 61 (Assumption: All Control is Hardwired)
						Fault Status		24VDC Disc. Contact In	-		
						Auto Status		24VDC Disc. Contact In	-		
						Run Command		Contact Out	-		
						Speed Command	2 PR-18GA, Twisted, Shielded	Analog 4-20mA	-		
						Speed Status		Analog 4-20mA	-		
CIP-PID-001	4866-RFP-P-005	PMP-6030	N/A	CIP Pump	PP-3100 - MTU & CIP Power Panel	Power	3c Cable for 15HP Motor	Power Supply	600VAC	CIP Skid	575VAC, 3P Motor
N/A	N/A	N/A	N/A	CIP Pump PMP-6030 VFD	CP-4000 - MTU RIO Panel	Run Status	8-#18	24VDC Disc. Contact In	-	MTU & CIP Power Panel PP-3100	Altivar 61 (Assumption: All Control is Hardwired)
						Fault Status		24VDC Disc. Contact In	-		
						Auto Status		24VDC Disc. Contact In	-		
						Run Command		Contact Out	-		
						Speed Command	2 PR-18GA, Twisted, Shielded	Analog 4-20mA	-		
						Speed Status		Analog 4-20mA	-		
CIP-PID-001	4866-RFP-P-005	HTR-6015	N/A	CIP Tank Heater	PP-3100 - MTU & CIP Power Panel	Power	3c Cable for 48kW Heater	Power Supply	600VAC	CIP Skid	600VAC Calorietech Heater
N/A	N/A	PP-3100	N/A	MTU & CIP Power Panel	CP-4000 - MTU RIO Panel	Run Status	2-#18	24VDC Disc. Contact In	-	MTU & CIP Power Panel PP-3100	Delco Panel
						Run Enable	2-#14	120VAC Disc. Out	-		
N/A	N/A	HTR-6015	N/A	CIP Tank Heater	PP-3100 - MTU & CIP Power Panel	Thermostat	2-#14	Contact	-	CIP Skid	600VAC Calorietech Heater
N/A	N/A	AIT-2000	N/A	Greensand Filter Hach SC1000	CP-2000 - Filter PLC Panel	Network	Cat 6 Ethernet Cable	Communications	-	Greensand Filter Area	Hach SC1000
						Power	2-#14, #14 Ground	Power Supply	120VAC		
N/A	N/A	AIT-4000	N/A	MTU Train 1 Hach SC1000	AIT-2000 - Greensand Filter Hach SC1000	Hach Network	1 PR-18GA, Twisted, Shielded	Communications	-	MTU Skid Train 1	Hach SC1000
N/A	N/A	AIT-4000F	N/A	MTU Train 2 Hach SC1000	AIT-4000 - MTU Train 1 Hach SC1000	Hach Network	1 PR-18GA, Twisted, Shielded	Communications	-	MTU Skid Train 2	Hach SC1000

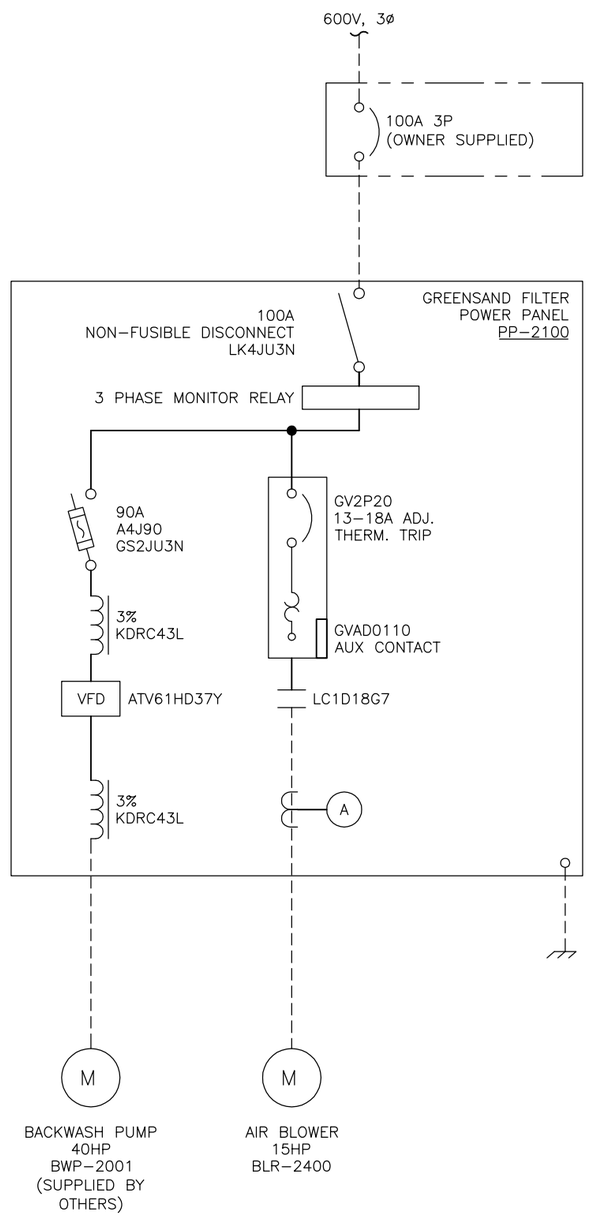

REVISION HISTORY

ISSUE	DATE	APPROV	DESCRIPTION
1.	12/1/2016		ISSUE FOR APPROVAL

REFERENCE DRAWING

NO.	TITLE
LEGEND	DELCO SYMBOL LEGEND

STRICTLY CONFIDENTIAL – PROPRIETARY INFORMATION

THIS DOCUMENT, BEING AN INSTRUMENT OF PROFESSIONAL SERVICE, IS THE PROPERTY OF DELCO AUTOMATION INC. IT SHALL NOT BE REPRODUCED, LENT OR OTHERWISE USED WITHOUT THE EXPRESSED WRITTEN PERMISSION OF DELCO AUTOMATION INC. NO REVISIONS OR MODIFICATIONS ARE TO BE MADE TO THIS DOCUMENT WITHOUT THE WRITTEN APPROVAL OF THE DESIGNER, UNDER WHOSE AUTHORITY IT WAS PREPARED AND/OR DELCO AUTOMATION INC.

STRICTLY CONFIDENTIAL – INTELLECTUAL PROPERTY

THIS DOCUMENT CONTAINS INTELLECTUAL PROPERTY RIGHTS OWNED BY DELCO AUTOMATION INC. THESE RIGHTS INCLUDE AND COMPRISE OF TRADE SECRETS AND SHALL NOT BE DISCLOSED TO A 3RD PARTY WITHOUT THE EXPRESSED WRITTEN PERMISSION OF DELCO AUTOMATION INC. DELCO AUTOMATION INC. RESERVES ALL RIGHTS AND TITLES.

STATUS: DWG DATABASE NOT FOUND

SIZE ANSI B

CUSTOMER NAME: TOWN OF RUSSEL

CUSTOMER PROJECT NO: 4162970

CONTACT:

delcoautomation

DELCO AUTOMATION
3735 THATCHER AVENUE
SASKATOON, SK. S7R 1B8
Ph: (306) 244–6449
Fx: (306) 665–7500

email: delco@delcoautomation.com

SCALE	DES BY/DWN BY/CHK'D BY:	JD/JD/GS	DATE 12/1/2016
N.T.S.	APPROVED BY:		DATE

PROJECT NO. 4162970

PROJECT NAME: RUSSELL WTP

TITLE: GREENSAND FILTER POWER PANEL

SINGLE LINE DIAGRAM

DRAWING NO.: SLD–2100 REV.: 1.

FILENAME: 4162970–SLD–2100

PLOT DATE 2004–AUG–13 12:55PM BY: GJUDKINS SHEET 1 of 1

24174734

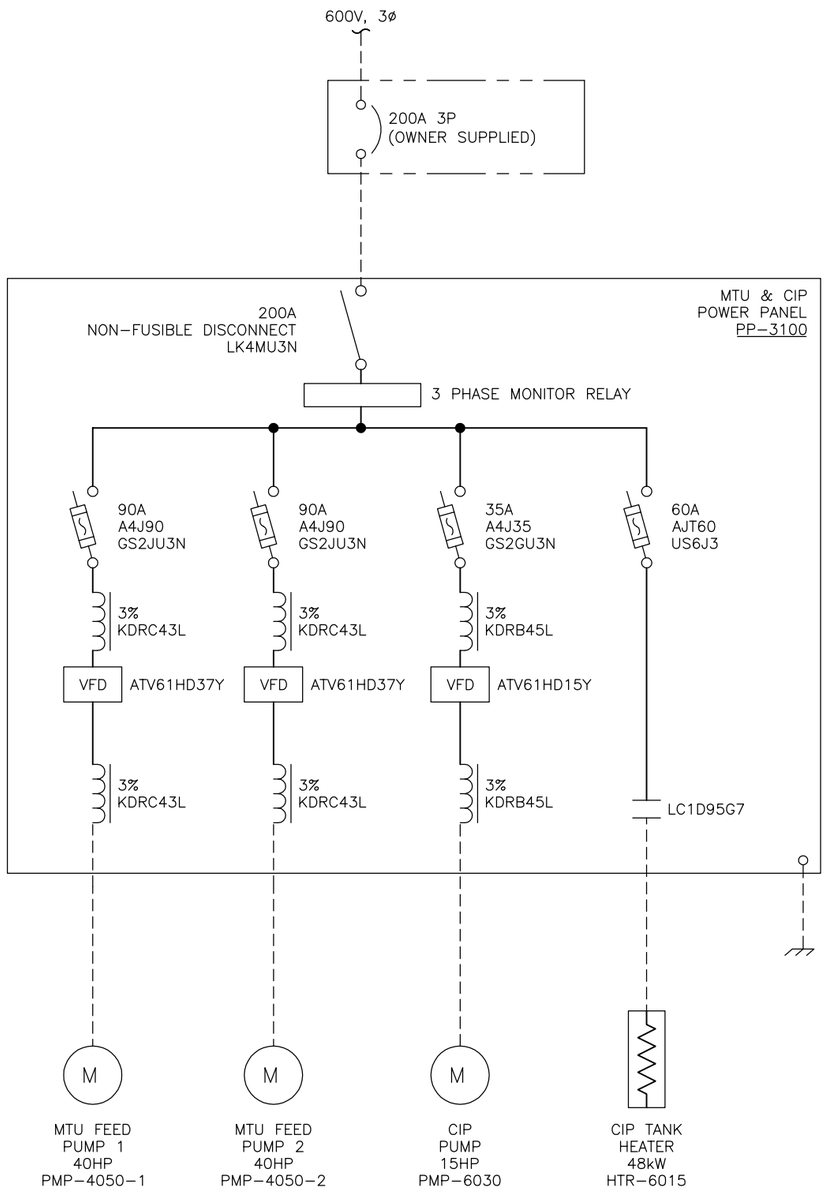

REVISION HISTORY

ISSUE	DATE	APPROV	DESCRIPTION
1.	12/1/2016		ISSUE FOR APPROVAL

REFERENCE DRAWING

NO.	TITLE
LEGEND	DELCO SYMBOL LEGEND

STRICTLY CONFIDENTIAL – PROPRIETARY INFORMATION

THIS DOCUMENT, BEING AN INSTRUMENT OF PROFESSIONAL SERVICE, IS THE PROPERTY OF DELCO AUTOMATION INC. IT SHALL NOT BE REPRODUCED, LENT OR OTHERWISE USED WITHOUT THE EXPRESSED WRITTEN PERMISSION OF DELCO AUTOMATION INC. NO REVISIONS OR MODIFICATIONS ARE TO BE MADE TO THIS DOCUMENT WITHOUT THE WRITTEN APPROVAL OF THE DESIGNER, UNDER WHOSE AUTHORITY IT WAS PREPARED AND/OR DELCO AUTOMATION INC.

STRICTLY CONFIDENTIAL – INTELLECTUAL PROPERTY

THIS DOCUMENT CONTAINS INTELLECTUAL PROPERTY RIGHTS OWNED BY DELCO AUTOMATION INC. THESE RIGHTS INCLUDE AND COMPRISE OF TRADE SECRETS AND SHALL NOT BE DISCLOSED TO A 3RD PARTY WITHOUT THE EXPRESSED WRITTEN PERMISSION OF DELCO AUTOMATION INC. DELCO AUTOMATION INC. RESERVES ALL RIGHTS AND TITLES.

STATUS: DWG DATABASE NOT FOUND

SIZE ANSI B

CUSTOMER NAME: TOWN OF RUSSEL

CUSTOMER PROJECT NO: 4162970

CONTACT:

delcoautomation

DELCO AUTOMATION
3735 THATCHER AVENUE
SASKATOON, SK. S7R 1B8
Ph: (306) 244–6449
Fx: (306) 665–7500

email: delco@delcoautomation.com

SCALE	DES BY/DWN BY/CHK'D BY:	JD/JD/GS	DATE 12/1/2016
N.T.S.	APPROVED BY:		DATE

PROJECT NO. 4162970

PROJECT NAME: RUSSELL WTP

TITLE: MTU & CIP POWER PANEL SINGLE LINE DIAGRAM

DRAWING NO.: SLD–3100 REV.: 1.

FILENAME: 4162970–SLD–3100

PLOT DATE 2004–AUG–13 12:55PM BY: GJUDKINS SHEET 1 of 1

24174733

PRELIMINARY NOT FOR CONSTRUCTION

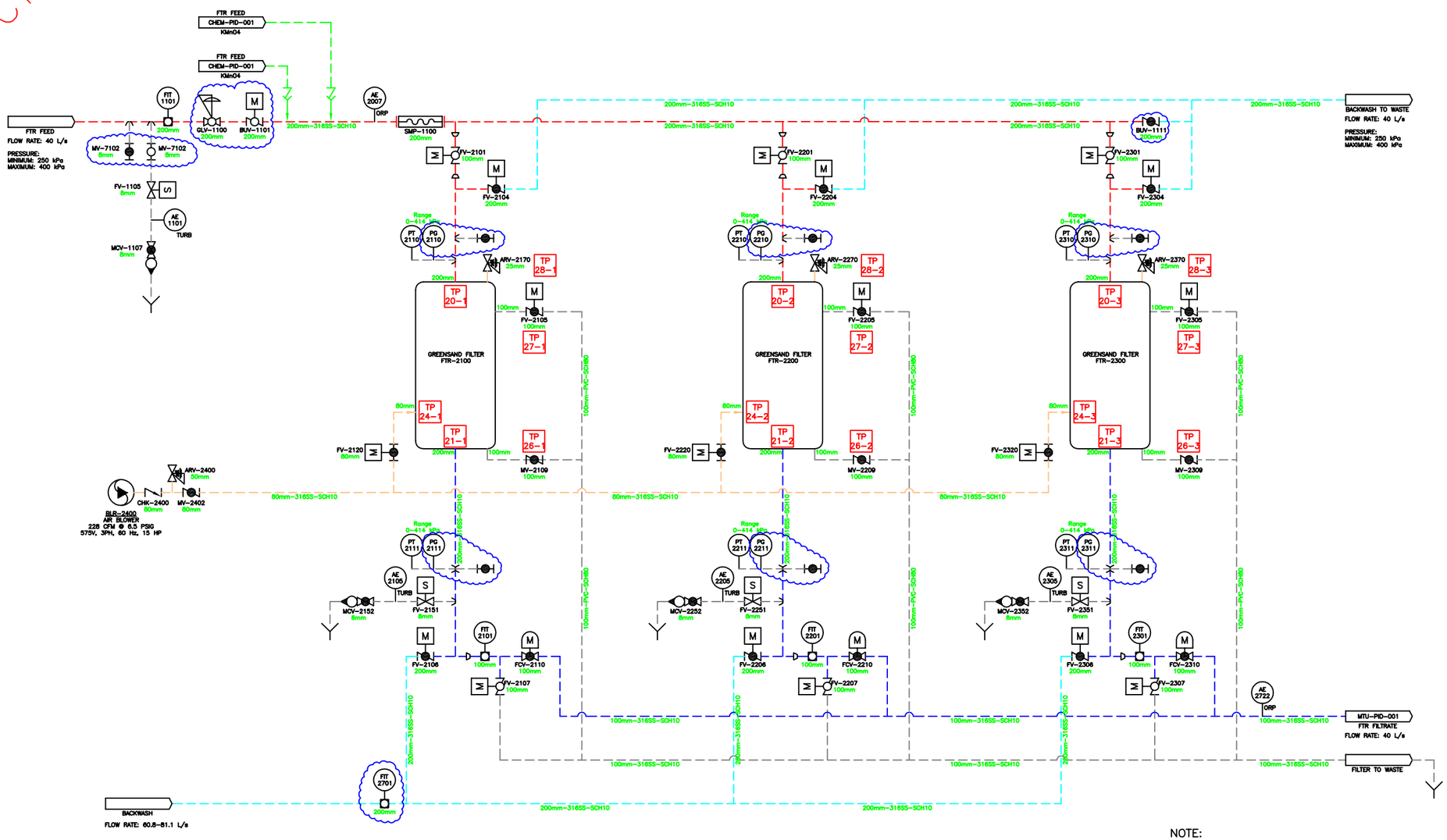

NOTE:

CLOUDED EQUIPMENT TO BE SUPPLIED BY GENERAL CONTRACTOR, ALL OTHER EQUIPMENT TO BE SUPPLIED LOOSE BY DELCO. TO BE INSTALLED INCLUDING PIPING, FITTINGS, HARDWARE, ETC. BY GENERAL CONTACTOR.

REVISION HISTORY

ISSUE	DATE	APPROV	DESCRIPTION
1	3/11/2016		ISSUE FOR PROPOSAL
2.	9/12/2016		ISSUE FOR APPROVAL

SCALE N.T.S.	DES BY/DWN BY/CHK'D BY:	QH/QH/TH	DATE 2/11/2016
	APPROVED BY:		DATE
FILENAME: 4162970-FTR-PID-001			
DRAWING NO.: FTR-PID-001		REV.: 2.	
PLOT DATE 2016-AUG-16 8:34AM BY: GGUENTHER		SHEET 1 of 1	

CUSTOMER NAME: MWSB
CUSTOMER PROJECT NO: 1334
CONTACT:

delcowater
DELCO WATER
3735 Thatcher Ave.
Saskatoon, SK. S7R 1B8
Ph: (306) 244-6449
Fx: (306) 665-7500
www.delcoautomation.com

PROJECT NO. 4162970
PROJECT NAME: TOWN OF RUSSELL

TITLE: GREENSAND FILTRATION SYSTEM
PIPING AND INSTRUMENTATION DIAGRAM

THIS DOCUMENT, BEING AN INSTRUMENT OF PROFESSIONAL SERVICE, CONTAINS INTELLECTUAL PROPERTY RIGHTS OWNED BY DELCO AUTOMATION INC. IT SHALL NOT BE REPRODUCED, LENT OR OTHERWISE USED WITHOUT THE EXPRESSED WRITTEN CONSENT OF DELCO AUTOMATION INC. NO REVISIONS OR MODIFICATIONS ARE TO BE MADE TO THIS DOCUMENT WITHOUT THE WRITTEN APPROVAL OF THE DESIGNER, UNDER WHOSE AUTHORITY IT WAS PREPARED AND/OR DELCO AUTOMATION INC. DELCO AUTOMATION INC RESERVES ALL RIGHTS AND TITLES.

PRELIMINARY NOT FOR CONSTRUCTION

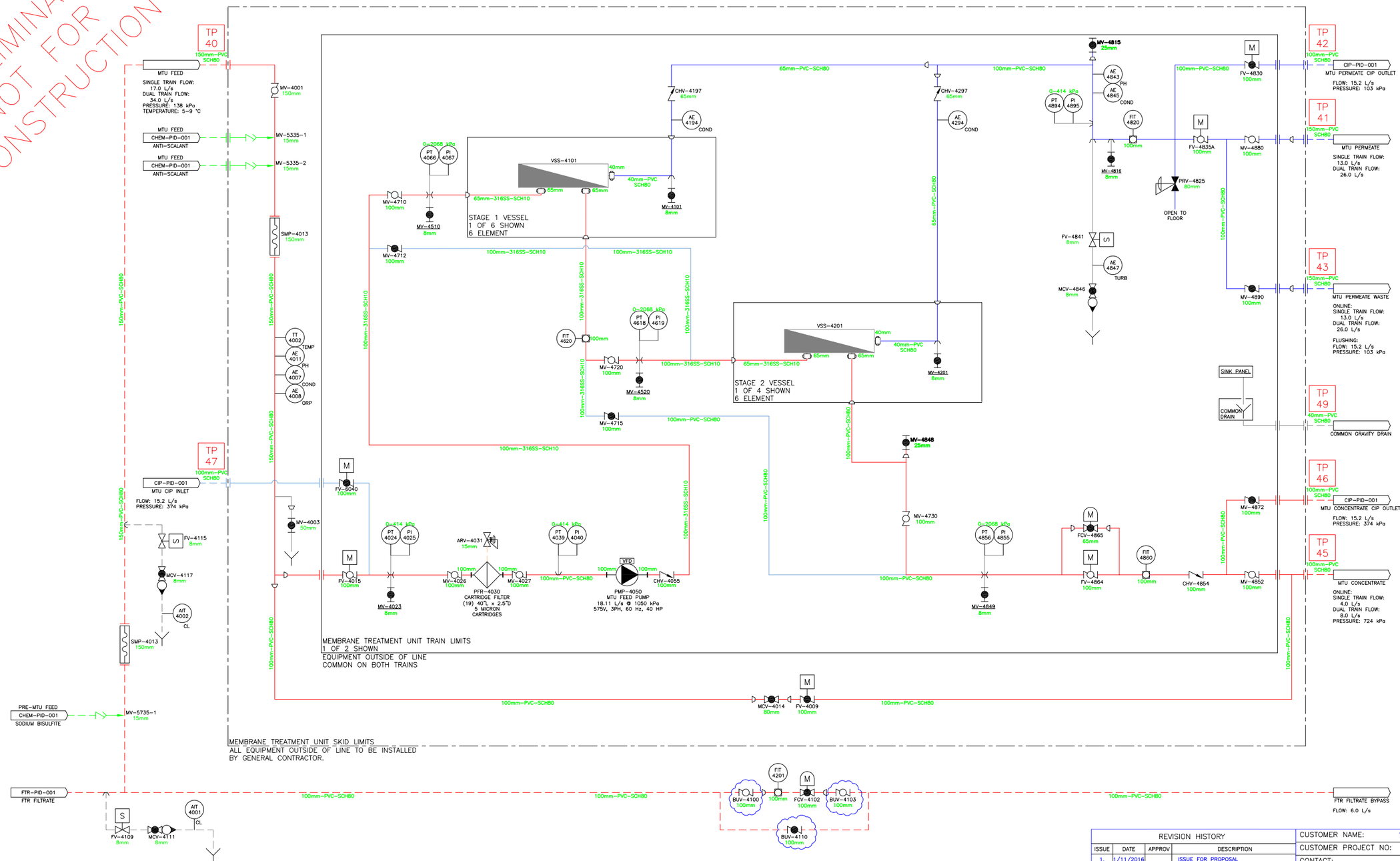

NOTE:

CLOUDED EQUIPMENT TO BE SUPPLIED BY GENERAL CONTRACTOR, ALL OTHER EQUIPMENT OUTSIDE OF SKID LIMITS TO BE SUPPLIED LOOSE BY DELCO. TO BE INSTALLED INCLUDING PIPING, FITTINGS, HARDWARE, ETC. BY GENERAL CONTRACTOR

REVISION HISTORY

ISSUE	DATE	APPROV	DESCRIPTION
1.	1/11/2016		ISSUE FOR PROPOSAL
2.	9/12/2016		ISSUE FOR APPROVAL

SCALE N.T.S.	DES BY/DWN BY/CHK'D BY:	GG/QH/TH	DATE 12/8/2016
	APPROVED BY:		DATE
FILENAME: 4162970–MTU–PID–001			
DRAWING NO.: MTU–PID–001		REV.: 1.	
PLOT DATE 2016–NOV–30 1:12PM BY: JDEHM		SHEET 1 of 1	

CUSTOMER NAME: TOWN OF RUSSEL

CUSTOMER PROJECT NO: 4162970

CONTACT:

DELCO WATER
3735 Thatcher Ave.
Saskatoon, SK. S7R 1B8
Ph: (306) 244–6449
Fx: (306) 665–7500
www.delcoautomation.com

PROJECT NO. 4162970

PROJECT NAME: RUSSELL WTP

TITLE: MEMBRANE TREAMENT UNIT

PIPING AND INSTRUMENTATION DIAGRAM

THIS DOCUMENT, BEING AN INSTRUMENT OF PROFESSIONAL SERVICE, CONTAINS INTELLECTUAL PROPERTY RIGHTS OWNED BY DELCO AUTOMATION INC. IT SHALL NOT BE REPRODUCED, LENT OR OTHERWISE USED WITHOUT THE EXPRESSED WRITTEN CONSENT OF DELCO AUTOMATION INC. NO REVISIONS OR MODIFICATIONS ARE TO BE MADE TO THIS DOCUMENT WITHOUT THE WRITTEN APPROVAL OF THE DESIGNER, UNDER WHOSE AUTHORITY IT WAS PREPARED AND/OR DELCO AUTOMATION INC. DELCO AUTOMATION INC RESERVES ALL RIGHTS AND TITLES.

2417067

PRELIMINARY NOT FOR CONSTRUCTION

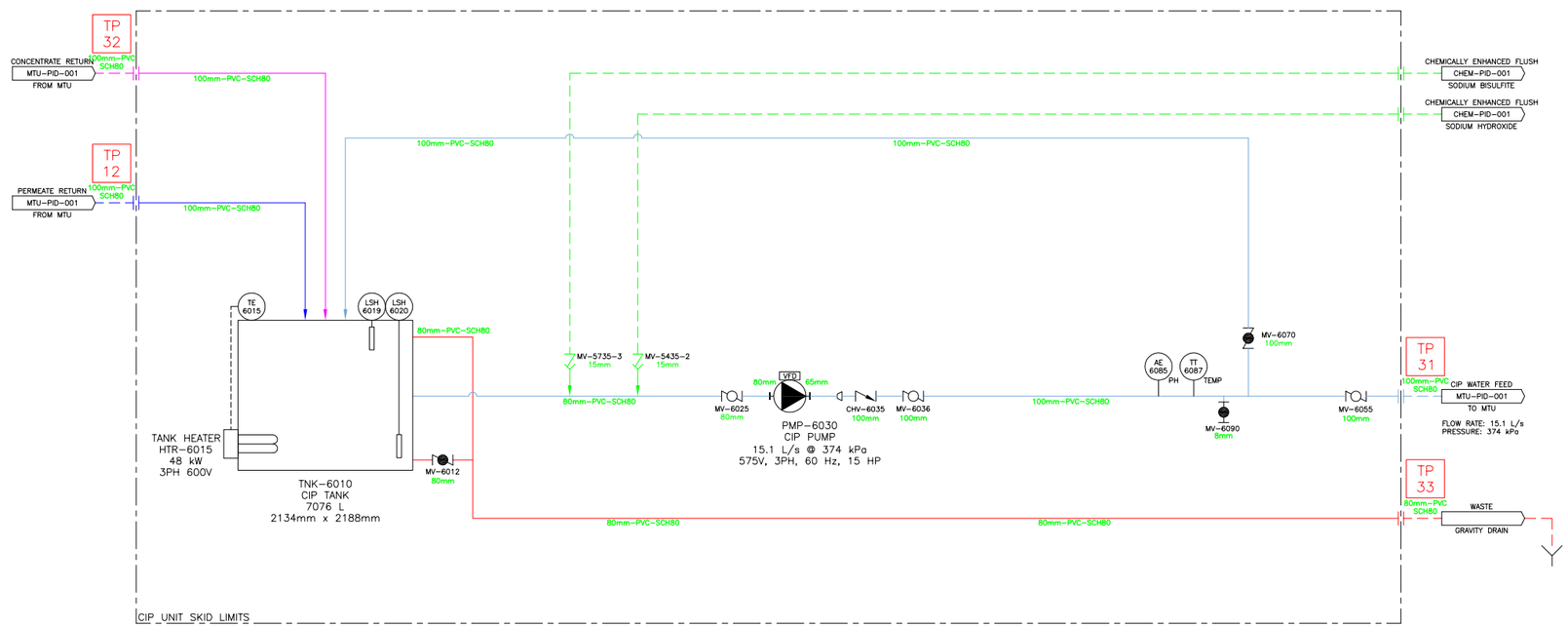

NOTES:

1. EQUIPMENT/PIPING LOCATED OUTSIDE OF BOUNDARY MARKED — - — — - — — - — TO BE SUPPLIED BY OTHERS.

2. LINETYPE — — — — — — — — — — — DESIGNATES PIPING NOT INCLUDED IN SCOPE OF SUPPLY.

8. TANK, SKID, AND INTERCONNECTING PIPING DISASSEMBLED FOR SHIPPING, TO BE REASSEMBLED ON-SITE BY GENERAL CONTRACTOR.

REVISION HISTORY

ISSUE	DATE	APPROV	DESCRIPTION
1.	3/11/2016		ISSUE FOR PROPOSAL
2.	9/12/2016		ISSUE FOR APPROVAL

SCALE N.T.S.	DES BY/DWN BY/CHK'D BY:	GG/QH/TH	DATE 1/11/2016
	APPROVED BY:		DATE
FILENAME: 4162970-CIP-PID-001			
DRAWING NO.: CIP-PID-001		REV.: 2.	
PLOT DATE 2016-AUG-16 7:41AM BY: GGUENTHER		SHEET 1 of 1	

CUSTOMER NAME: MWSB
CUSTOMER PROJECT NO: 1334
CONTACT:

delcowater
DELCO WATER
3735 Thatcher Ave.
Saskatoon, SK. S7R 1B8
Ph: (306) 244-6449
Fx: (306) 665-7500
www.delcoautomation.com

PROJECT NO. 4162970
PROJECT NAME: RUSSELL WTP

TITLE: CLEAN IN PLACE SYSTEM
PIPING AND INSTRUMENTATION DIAGRAM

THIS DOCUMENT, BEING AN INSTRUMENT OF PROFESSIONAL SERVICE, CONTAINS INTELLECTUAL PROPERTY RIGHTS OWNED BY DELCO AUTOMATION INC. IT SHALL NOT BE REPRODUCED, LENT OR OTHERWISE USED WITHOUT THE EXPRESSED WRITTEN CONSENT OF DELCO AUTOMATION INC. NO REVISIONS OR MODIFICATIONS ARE TO BE MADE TO THIS DOCUMENT WITHOUT THE WRITTEN APPROVAL OF THE DESIGNER, UNDER WHOSE AUTHORITY IT WAS PREPARED AND/OR DELCO AUTOMATION INC. DELCO AUTOMATION INC RESERVES ALL RIGHTS AND TITLES.

24174071

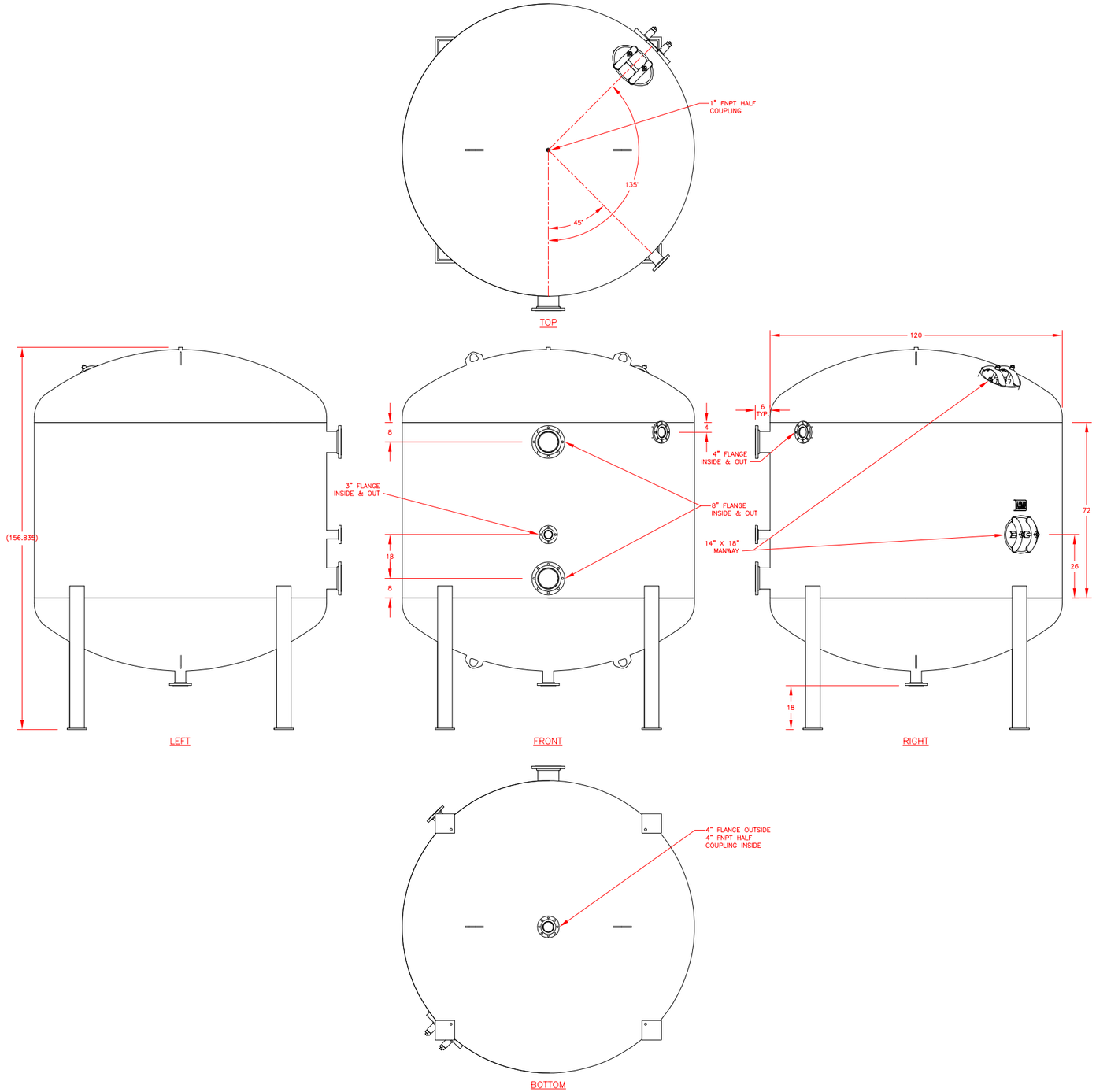

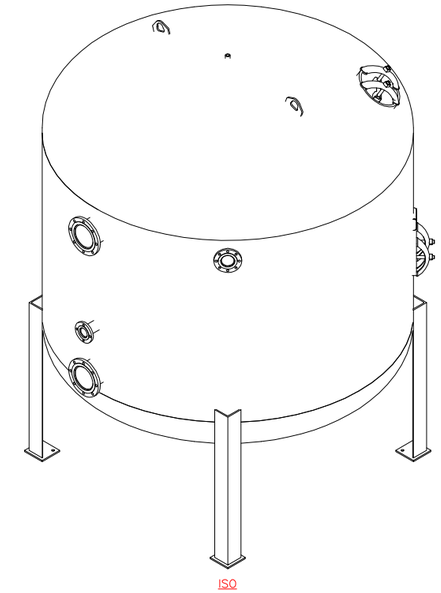

MANUFACTURE NOTES:

QUANTITY: 3 REQUIRED AS SHOWN

DESIGN: ASME CODE VIII DIV. 1 2015

WORKING PRESSURE: 100 PSI

FINISHING:

INTERIOR:

BLAST SSPC–SP10 NEAR WHITE FINISH
2 COATS 9 MILS DFT MIN
TNEMEC POTA–POX 15BL TANK WHITE NSF61

EXTERIOR:

BLAST SSPC–SP6 COMMERCIAL FINISH
2 COATS 7 MILS DFT MIN
TNEMEC POTA–POX 39BL DELFT BLUE NSF61

TOUCH–UP PAINT:

PROVIDE TOUCH–UP PAINT FOR ALL TOP COAT COLOURS

FEATURES:

- 80:10 TANK HEADS
- 4 STRUCTURAL LEGS AS PER TANK MANUFACTURE STANDARDS
- LIFT LUGS TOP AND BOTTOM AS NECESSARY
- 2 14" X 18" ELLIPTICAL MANWAYS
- 2 8" 150# FLANGED INSIDE & OUT NOZZLES
- 1 4" FNPT HALF COUPLING INSIDE & 4" 150# FLANGED OUT NOZZLE
- 1 3" 150# FLANGED INSIDE & OUT NOZZLE
- 1 1" NPT HALF COUPLING
- 2 DISTRIBUTION SUPPORT TABS IN TOP TANK HEAD
- 6 AIR SCOUR HEADER/LATERAL SUPPORT TABS ON SIDE SHELL
- 6 UNDERDRAIN HEADER/LATERAL SUPPORT TABS IN BOTTOM TANK HEAD

SHIPPING:

- DUNNAGE AND PAINT PROTECTION AS NECESSARY

REVISION HISTORY

ISSUE	DATE	APPROV	DESCRIPTION
1.	9/12/2016		ISSUE FOR APPROVAL

SCALE N.T.S.	DES BY/DWN BY/CHK'D BY:	QH/QH/QH	DATE 7/12/2016
	APPROVED BY:		DATE
FILENAME: 4162970–TNK–GA–001			
DRAWING NO.: TNK–GA–001		REV.: 1.	
PLOT DATE: (NOT PLOTTED YET)		SHEET 1 of 1	

CUSTOMER NAME: MWSB

CUSTOMER PROJECT NO: 1334

CONTACT:

delcowater
DELCO WATER
3735 Thatcher Ave.
Saskatoon, SK. S7R 1B8
Ph: (306) 244–6449
Fx: (306) 665–7500
www.delcoautomation.com

PROJECT NO. 4162970

PROJECT NAME: RUSSELL WTP

TITLE: 120" OD GREENSAND FILTER VESSEL DETAIL

GENERAL ARRANGEMENT DRAWING

THIS DOCUMENT, BEING AN INSTRUMENT OF PROFESSIONAL SERVICE, CONTAINS INTELLECTUAL PROPERTY RIGHTS OWNED BY DELCO AUTOMATION INC. IT SHALL NOT BE REPRODUCED, LENT OR OTHERWISE USED WITHOUT THE EXPRESSED WRITTEN CONSENT OF DELCO AUTOMATION INC. NO REVISIONS OR MODIFICATIONS ARE TO BE MADE TO THIS DOCUMENT WITHOUT THE WRITTEN APPROVAL OF THE DESIGNER, UNDER WHOSE AUTHORITY IT WAS PREPARED AND/OR DELCO AUTOMATION INC. DELCO AUTOMATION INC RESERVES ALL RIGHTS AND TITLES.

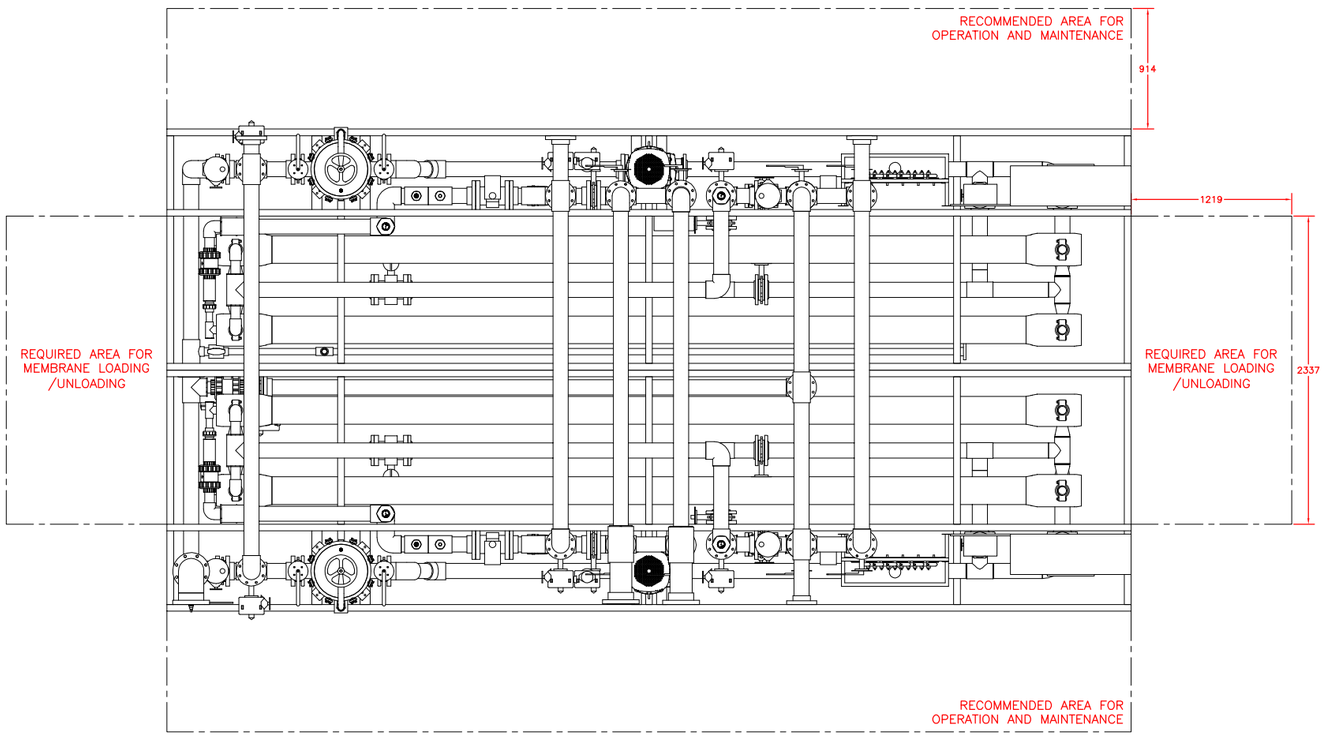

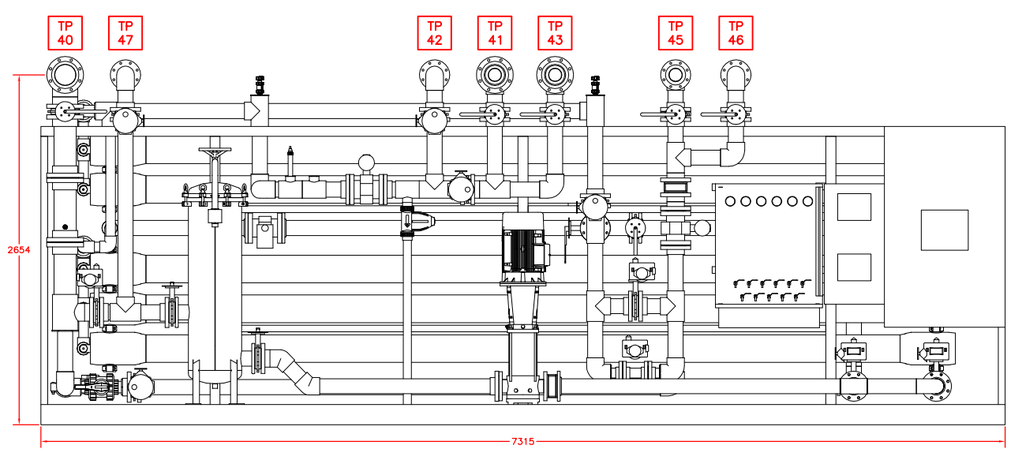

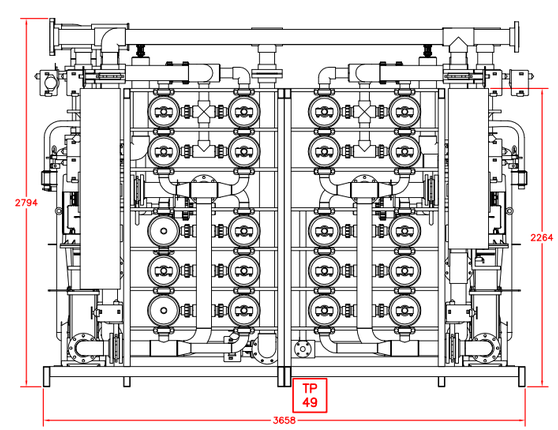

NOTES:

1. ONE (1) UNIT SHOWN CONSISTING OF TWO (2) MIRRORED SKID HALVES
2. PLC AND RIO CONTROL PANELS W/ HMI TO BE LOCATED ON SKID
3. ALL VALVES & INSTRUMENTATION TO BE PROPERLY TAGGED
4. UNIT TO BE LEAK TESTED PRIOR TO SHIPPING
5. DESIGN DATA:
   - EST. SHIPPING WEIGHT: 4536 KG (10,000 LB) PER SKID
   - EST. OPERATING WEIGHT: 14515 KG (32,000 LB)
   - PIPING MATERIAL:
     - HIGH PRESSURE: SCH 10 316SS
     - LOW PRESSURE: SCH 80 PVC
   - GASKET MATERIAL:
     - HIGH PRESSURE: NEOPRENE
     - LOW PRESSURE: EPDM
   - BOLTING MATERIAL:
     - BOLTS: ASTM F593C 304SS
     - NUTS: ASTM F594 304SS
     - WASHERS: ASTM A194 GR2 304SS
6. ALL SKIDS AND PROCESS TANKS SHOULD BE ELECTRICALLY GROUNDED TO CUSTOMER'S GROUNDING GRID BY INSTALLATION CONTRACTOR. TWO (2) CONNECTIONS REQUIRED.
7. INTERCONNECTING PIPING, THAT CONTINUES OFF THE SKID, MUST BE SUPPORTED OFF SKID. INTERCONNECTING PIPING SHOULD NOT BE SUPPORTED BY PIPING ON THE SKID.
8. DESIGN AND INSTALLATION OF ANCHORING TO BE PERFORMED BY OTHERS.
9. FRAME TO BE ISOLATED FROM CONCRETE BY RUBBER BLOCKS AT 24" INTERVALS.
10. TWO (2) MIRRORED SKID HALVES AND INTERCONNECTING PIPING DISASSEMBLED FOR SHIPPING, TO BE REASSEMBLED ON SITE BY GENERAL CONTRACTOR.
11. THE CONTRACTOR TO SUPPLY AND INSTALL PROPERLY SIZED OFF-SKID VACUUM BREAKERS ON ALL MTU PERMEATE AND CONCENTRATE LINES LEAVING THE SKID TO ENSURE THE MTU IS VACUUM/SIPHON FREE

PRELIMINARY
NOT FOR
CONSTRUCTION

TP #	SIZE	FUNCTION
TP 40	150 mm	MTU FEED
TP 41	150 mm	MTU PERMEATE
TP 42	100 mm	MTU PERMEATE CIP OUTLET
TP 43	150 mm	MTU PERMEATE WASTE
TP 45	100 mm	MTU CONCENTRATE
TP 46	100 mm	MTU CONCENTRATE CIP OUTLET
TP 47	100 mm	MTU CIP INLET
TP 49	40 mm	MTU COMMON DRAIN WASTE

REVISION HISTORY

ISSUE	DATE	APPROV	DESCRIPTION
1.	3/11/2016		ISSUE FOR PROPOSAL
2.	9/12/2016		ISSUE FOR APPROVAL

SCALE N.T.S.	DES BY/DWN BY/CHK'D BY:	QH/QH/QH	DATE 19/08/2016
	APPROVED BY:		DATE
FILENAME: 4162970-MTU-GA-001			
DRAWING NO.: MTU-GA-001		REV.: 2.	
PLOT DATE: (NOT PLOTTED YET)		SHEET 1 of 1	

CUSTOMER NAME: MWSB
CUSTOMER PROJECT NO: 1334
CONTACT:

DELCO WATER
3735 Thatcher Ave.
Saskatoon, SK. S7R 1B8
Ph: (306) 244-6449
Fx: (306) 665-7500
www.delcoautomation.com

PROJECT NO. 4162970
PROJECT NAME: RUSSELL WTP

TITLE: MEMBRANE TREATMENT UNIT
GENERAL ARRANGEMENT DRAWING

THIS DOCUMENT, BEING AN INSTRUMENT OF PROFESSIONAL SERVICE, CONTAINS INTELLECTUAL PROPERTY RIGHTS OWNED BY DELCO AUTOMATION INC. IT SHALL NOT BE REPRODUCED, LENT OR OTHERWISE USED WITHOUT THE EXPRESSED WRITTEN CONSENT OF DELCO AUTOMATION INC. NO REVISIONS OR MODIFICATIONS ARE TO BE MADE TO THIS DOCUMENT WITHOUT THE WRITTEN APPROVAL OF THE DESIGNER, UNDER WHOSE AUTHORITY IT WAS PREPARED AND/OR DELCO AUTOMATION INC. DELCO AUTOMATION INC RESERVES ALL RIGHTS AND TITLES.

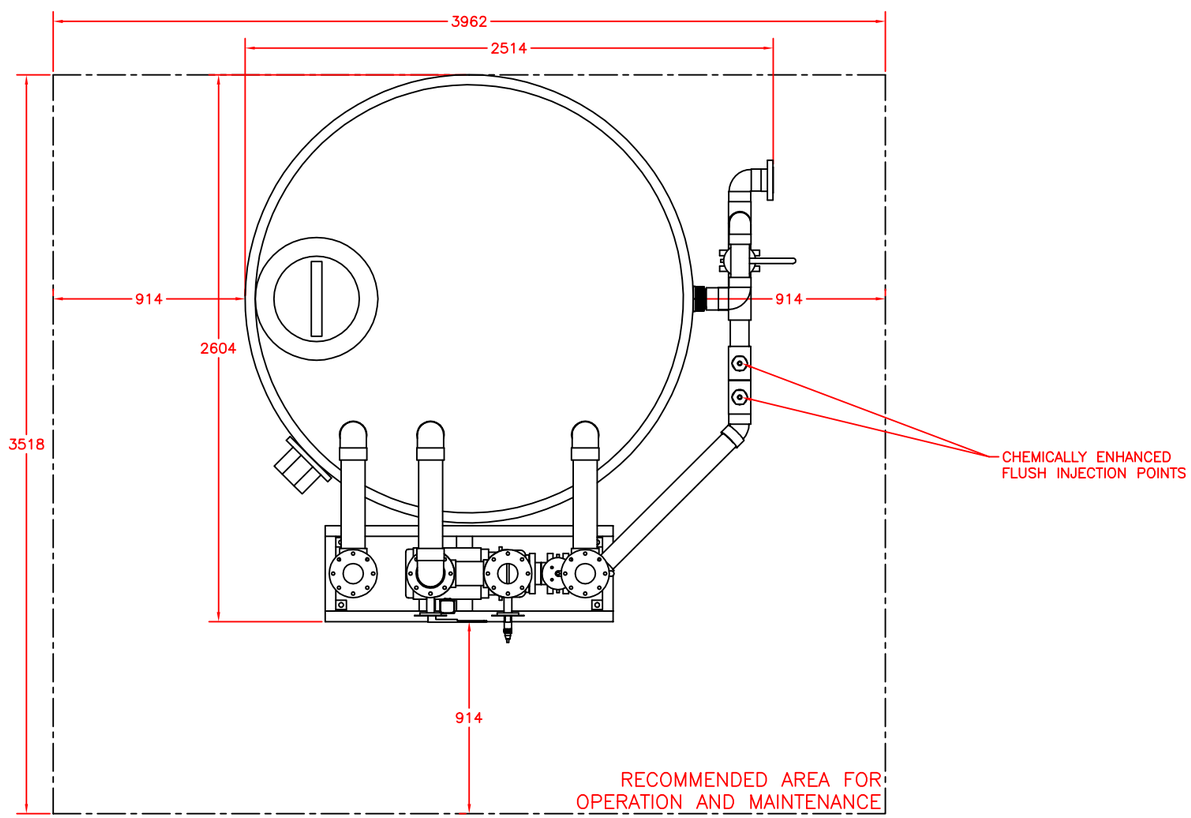

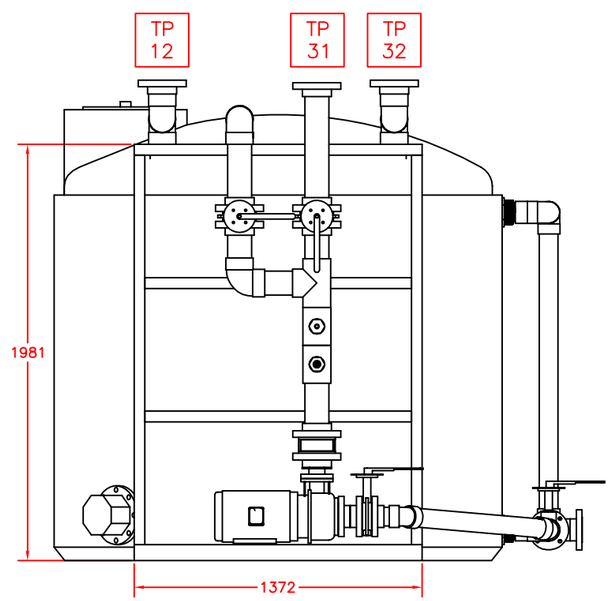

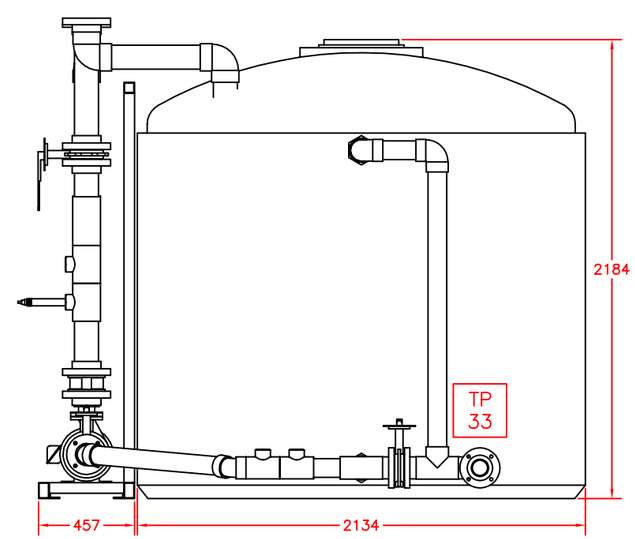

NOTES

1. QUANTITY REQUIRED ONE (1) AS SHOWN.
2. ALL VALVES & INSTRUMENTATION TO BE PROPERLY TAGGED.
3. DESIGN DATA:
   - EST. SHIPPING WEIGHT: 499 KG
   - EST. OPERATING WEIGHT: 6169 KG
   - TANK VOLUME: 7076L
   - PIPING MATERIAL:
     - LOW PRESSURE: SCH 80 PVC
   - TANK MATERIAL: POLYETHYLENE
   - GASKET MATERIAL:
     - LOW PRESSURE: EPDM
   - FASTENER MATERIAL: SS BOLTS, NUTS, AND WASHERS
4. ALL UNITS AND PROCESS TANKS SHOULD BE ELECTRICALLY GROUNDED TO GROUNDING GRID BY INSTALLATION CONTRACTOR. TWO (2) CONNECTIONS REQUIRED.
5. INTERCONNECTING PIPING THAT CONTINUES OFF THE SKID SHOULD NOT BE SUPPORTED BY PIPING ON THE SKID.
6. TANK, SKID, AND INTERCONNECTING PIPING DISASSEMBLED FOR SHIPPING, TO BE REASSEMBLED ON-SITE BY GENERAL CONTRACTOR.

PRELIMINARY
NOT FOR
CONSTRUCTION

TP #	SIZE	FUNCTION
TP 12	100mm	MTU PERMEATE RETURN
TP 31	100mm	CIP TO MTU
TP 32	100mm	MTU CONCENTRATE RETURN
TP 33	80mm	CIP COMMON DRAIN WASTE

REVISION HISTORY

ISSUE	DATE	APPROV	DESCRIPTION
1.	1/11/2016		ISSUE FOR PROPOSAL
2.	9/12/2016		ISSUE FOR APPROVAL

SCALE: N.T.S.
DES BY/DWN BY/CHK'D BY: QH/QH/TH
DATE: 1/11/2016
APPROVED BY:
DATE
FILENAME: 4162970-CIP-GA-001
DRAWING NO.: CIP-GA-001
REV.: 2.
PLOT DATE 2014-OCT-04 12:42PM BY: GGUENTHER
SHEET 1 of 1

CUSTOMER NAME: MWSB
CUSTOMER PROJECT NO: 1334
CONTACT:

delcowater
DELCO WATER
3735 Thatcher Ave.
Saskatoon, SK. S7R 1B8
Ph: (306) 244-6449
Fx: (306) 665-7500
www.delcoautomation.com

PROJECT NO. 4162970
PROJECT NAME: RUSSELL WTP
TITLE: CLEAN IN PLACE SYSTEM
GENERAL ARRANGEMENT DRAWING

THIS DOCUMENT, BEING AN INSTRUMENT OF PROFESSIONAL SERVICE, CONTAINS INTELLECTUAL PROPERTY RIGHTS OWNED BY DELCO AUTOMATION INC. IT SHALL NOT BE REPRODUCED, LENT OR OTHERWISE USED WITHOUT THE EXPRESSED WRITTEN CONSENT OF DELCO AUTOMATION INC. NO REVISIONS OR MODIFICATIONS ARE TO BE MADE TO THIS DOCUMENT WITHOUT THE WRITTEN APPROVAL OF THE DESIGNER, UNDER WHOSE AUTHORITY IT WAS PREPARED AND/OR DELCO AUTOMATION INC. DELCO AUTOMATION INC RESERVES ALL RIGHTS AND TITLES.

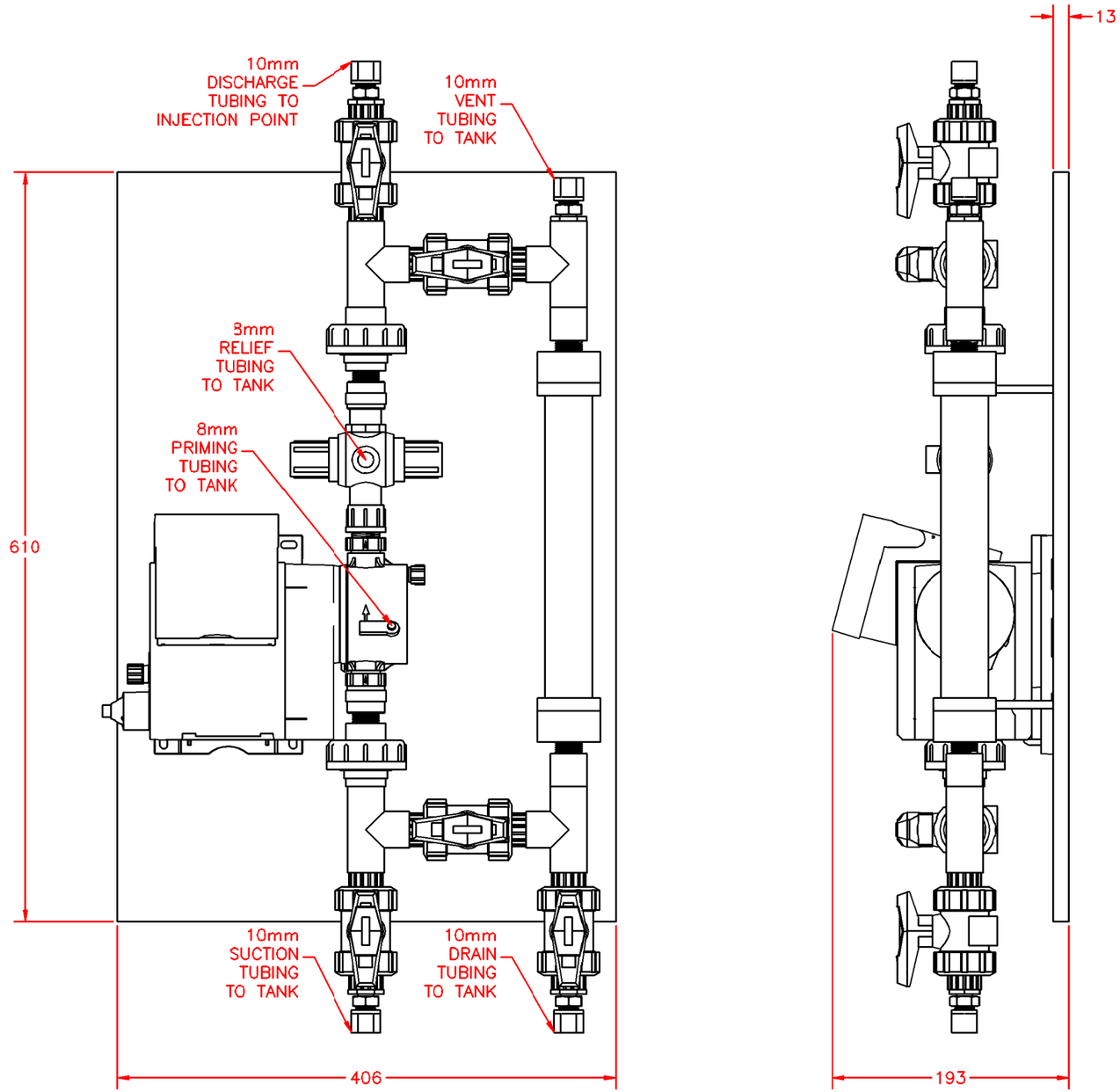

ALLOW FOR SPACE ON PUMP
SIDE OF PANEL FOR PUMP WIRING

THIS DOCUMENT, BEING AN INSTRUMENT OF PROFESSIONAL SERVICE, CONTAINS INTELLECTUAL PROPERTY RIGHTS OWNED BY DELCO AUTOMATION INC. IT SHALL NOT BE REPRODUCED, LENT OR OTHERWISE USED WITHOUT THE EXPRESSED WRITTEN CONSENT OF DELCO AUTOMATION INC. NO REVISIONS OR MODIFICATIONS ARE TO BE MADE TO THIS DOCUMENT WITHOUT THE WRITTEN APPROVAL OF THE DESIGNER, UNDER WHOSE AUTHORITY IT WAS PREPARED AND/OR DELCO AUTOMATION INC. DELCO AUTOMATION INC RESERVES ALL RIGHTS AND TITLES.

REVISION HISTORY

ISSUE	DATE	APPROV	DESCRIPTION
1.	9/12/2016		ISSUE FOR APPROVAL

SCALE N.T.S.	DES BY/DWN BY/CHK'D BY:	CK/QH/QH	DATE 9/12/2016
	APPROVED BY:		DATE
FILENAME: 4162970-CHEM-GA-001			
DRAWING NO.: CHEM-GA-001		REV.: 1.	
PLOT DATE 2015-APR-08 2:13PM BY: DPETRUCHA		SHEET 1 of 1	

CUSTOMER NAME: MWSB
CUSTOMER PROJECT NO: 1334
CONTACT:

delcowater
DELCO WATER
3735 Thatcher Ave.
Saskatoon, SK. S7R 1B8
Ph: (306) 244-6449
Fx: (306) 665-7500
www.delcoautomation.com

PROJECT NO. 4162970
PROJECT NAME: TOWN OF RUSSELL

TITLE: DDA 7.5-16 SINGLE PUMP CHEMICAL PANEL
GENERAL ARRANGEMENT DRAWING

PERFORMANCE

BAROMETER (PSIA)	14.7	DISCHARGE PRESSURE (PSIA)	21.3
INLET PRESSURE (PSIA)	14.7	DISCHARGE TEMP (°F)	147.4
INLET TEMPERATURE (°F)	68F	BLOWER SPEED (RPM)	2844
INLET FLOW (ACFM)	228	BLOWER BRAKE HP	10.38

BILL OF MATERIALS - 2.5S PACKAGE

ITEM	QUANTITY	DESCRIPTION	ITEM	QUANTITY	DESCRIPTION
1	1	2 1/2" INLET FILTER	6	1	BASEPLATE
2	1	2 1/2" INLET SILENCER	7	1	2" RELIEF VALVE (337)
3	2	FLEXIBLE CONNECTOR	8	1	V-BELT GUARD
4	1	2 1/2" DISCHARGE SILENCER	9	1	V-BELT DRIVE
5	1	ADJUSTABLE MOTOR BASE			

MOTOR: FRAME TBD HP 15 RPM TBD VOLT/PH/HZ 575V/3/60Hz MFG. TBD

CUSTOMER Delco Automation
PROJECT
CONTACT
SCPS FILE #

	MODEL	BLOWER	C	CD	H	WEIGHT (LBS)
☐	33-2.5-2.5	33 URAI	55.13	18	42.75	328
☑	36-2.5-2.5	36 URAI	55.13	18	42.75	356
☐	45-2.5-2.5	45 URAI	56.88	18	44.5	363
☐	53-2.5-2.5	53 URAI	58.13	18	45.75	397

ROOTSPAK STANDARD ARRANGEMENT

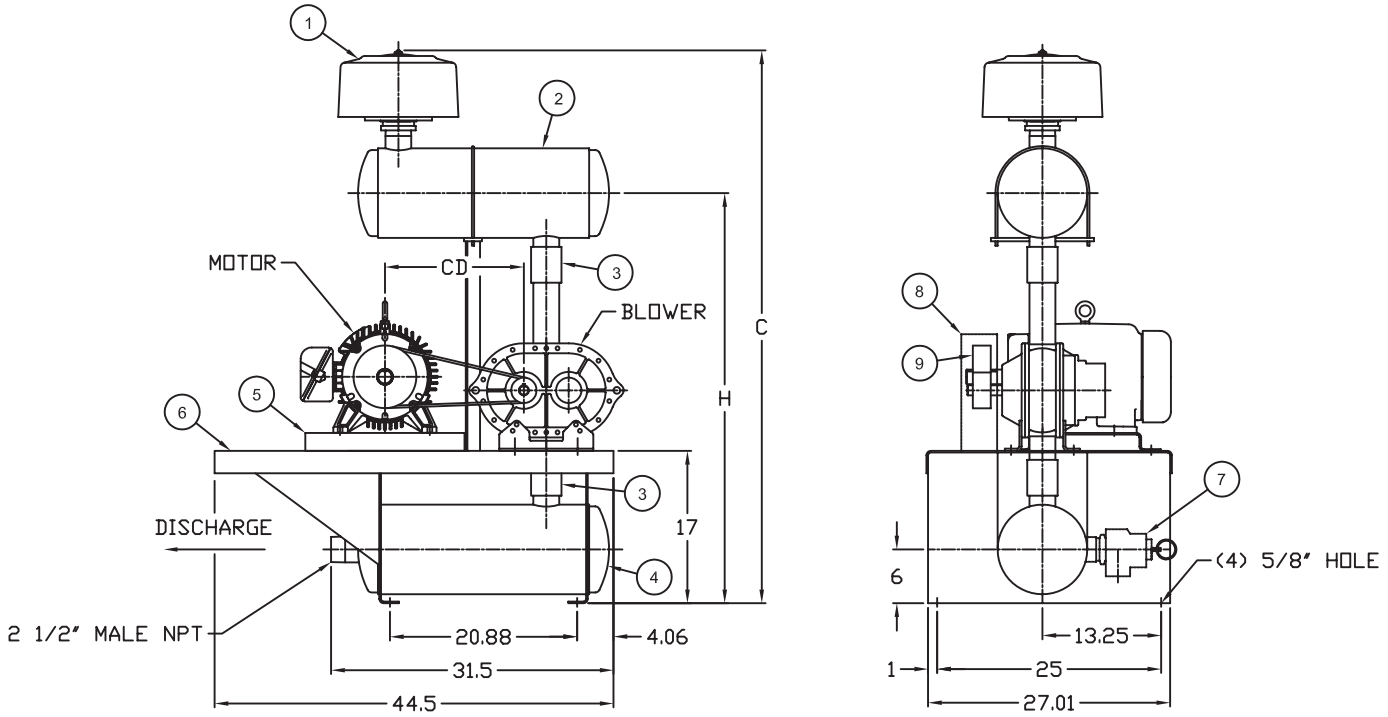

NOTES:
1. ALL DIMENSION ARE IN INCHES.
2. ALL DIMENSIONS ARE APPROXIMATE.
3. PACKAGES MAY NOT BE EXACTLY AS SHOWN.
4. ALL WEIGHTS ARE APPROXIMATE AND DO NOT INCLUDE MOTOR AND MOTOR BASE.
5. ALL INSTRUMENTS MOUNTED IN DISCHARGE SILENCER.

THIS PRINT AND ALL INFORMATION HEREON IS THE PROPERTY OF SMITH CAMERON PUMP SOLUTIONS AND MUST NOT BE MADE PUBLIC, COPIED OR USED IN ANY WAY DETRIMENTAL TO OUR INTEREST. IT IS LOANED SUBJECT TO RETURN ON DEMAND UNLESS FURNISHED UNDER CONTRACT PROVISIONS.

PRODUCT LINE	URAI		
TYPE / FRAME	2.5S		
B.O.M.	-		
SCPS QUOTE NO.	-		
SCPS J.O. NO.	-		
SCALE	NTS		
DRAWN	AIC	DATE	29 JAN 2004
CHKD.	AIC	DATE	29 JAN 2004
APPVD.	AIC	DATE	29 JAN 2004
REPLACES	-		

SMITH CAMERON PUMP SOLUTIONS

TITLE ROOTSPAK 2.5S

DRAWING NO. A1008

REV. B

REPLACED BY -

SHEET 1 OF 1

APPENDIX C

EXISTING WELL SITE CONTROL PANEL

MUNICIPALITY OF RUSSEL - BINSCARTH WATER SUPPLY PROJECT
WELL MECHANIZATION

PUMP CONTROL PANEL RWCP-1
ELECTRICAL/CONTROL WIRING AND LAYOUT ASSEMBLY DIAGRAM(s)

Automation/System Integrator:

HUND AUTOMATION

Consulting Engineer:

WSP

Client:

ARNASONS INDUSTRIES

TERMS AND CONDITIONS:
THIS DOCUMENT IS EXPRESSLY SUBJECT TO ADDITIONAL TERMS AND CONDITIONS AS NOTED BELOW.
ADDITIONAL TERMS AND CONDITIONS NOT OTHERWISE STATED OR AGREED TO IN THIS DOCUMENT, INCLUDING WITHOUT LIMITATION ANY TERMS AND CONDITIONS CONTAINED N ANY DOCUMENTATION RECEIVED FROM THE CUSTOMER , SHALL NOT, UNLESS EXPRESSLY ACKNOWLEDGED IN WRITING BY US, FORM PART OF ANY CONTRACT WITH THE CUSTOMER.

SCOPE OF WORK:
THESE DRAWINGS AND OUR SCOPE OF WORK IS LIMITED TO THE SCOPE AGREED TO IN HUND AUTOMATION QUOTE.

PROPRIETARY INFORMATION:
ALL DRAWINGS, SPECIFICATIONS, SKETCHES, DESIGNS, SOFTWARE, DOCUMENTATION AND FINANCIAL QUOTATIONS SUBMITTED BY HUND AUTOMATION ARE AND SHALL REMAIN AT ALL TIMES THE PROPRIETARY INFORMATION OF HUND AUTOMATION. HUND AUTOMATION PROPRIETARY INFORMATION SHALL ONLY BE USED BY THE BUYER OR AN INTERMEDIATE SUPPLIER AND ONLY FOR THE INTENDED APPLICATION. HUND AUTOMATION PROPRIETARY INFORMATION SHALL NOT BE USED, COPIED OR DISCLOSED IN WHOLE OR IN PART BY THE BUYER TO ANY THIRD PARTY WITHOUT THE EXPRESS WRITTEN CONSENT OF HUND AUTOMATION. THE LICENSE TO USE THE PROPRIETARY INFORMATION PROVIDED BY HUND AUTOMATION AND THE SOLUTION DEVELOPED FOR THE BUYER IN NOT TRANSFERABLE TO ANY OTHER APPLICATION AND CANNOT BE ASSIGNED TO ANY THIRD PARTY WITHOUT THE WRITTEN CONSENT OF HUND AUTOMATION.

BUYER-SUPPLIED INFORMATION:
BUYER - SUPPLIED INFORMATION INCLUDES SPECIFICATIONS, DESIGNS, DRAWINGS, INSTRUCTIONS, TECHNICAL DATA OR ANY OTHER TYPES OF INFORMATION SUPPLIED BY THE BUYER TO HUND AUTOMATION OR THE MARKETPLACE GENERALLY IN CONNECTION WITH ANY REQUEST FOR PRICING OR SUPPLY ISSUED BY THE BUYER. ANY INFORMATION SUPPLIED BY THE BUYER'S CONTRACTOR REPRESENTATIVE, INCLUDING WITHOUT LIMITATION ANY ENGINEERING OR OTHER CONSULTANT REPRESENTING THE BUYER, SHALL BE TREATED AS INFORMATION SUPPLIED BY THE BUYER HEREUNDER.

HUND AUTOMATION-SUPPLIED INFORMATION/SERVICES/PRODUCTS:
HUND AUTOMATION - SUPPLIED INFORMATION INCLUDES SPECIFICATIONS, DESIGNS, DRAWINGS, INSTRUCTIONS, TECHNICAL DATA, OR ANY OTHER TYPES OF INFORMATION SUPPLIED BY HUND AUTOMATION TO THE BUYER OR THE MARKETPLACE IS CREATED BY COMPANY EMPLOYED C.E.T.'s (CERTIFIED ENGINEERING TECHNOLOGISTS) REGISTERED IN THE PROVINCE OF MANITOBA, AND OPERATING IN ACCORDANCE WITH THE "Certified Applied Science Technologists Act" AND "The Statement of Professional Regulation and Practice". WORK IS ACCOMPLISHED/PROVIDED THROUGH THE APPLICATION OF ESTABLISHED CODES, STANDARDS AND GENERALLY RECOGNIZED PROCEDURES AND PRACTICES APPROPRIATE TO THE ENDEAVOR, and; IN ACCORDANCE WITH THE CERTIFIED TECHNOLOGY PROFESSIONAL's ACADEMIC QUALIFICATIONS, TRAINING and EXPERIENCE. HUND AUTOMATION DOES NOT ENGAGE IN THE PRACTICE OF PROFESSIONAL AND/OR CONSULTING ENGINEERING NOR IS THE INFORMATION SUPPLIED BY HUND AUTOMATION ASSUMED TO BE AS SUCH. INFORMATION/DESIGNS SUPPLIED BY A PROFESSIONAL ENGINEER AND/OR CONSULTING ENGINEER ARE SEALED INDICATING PROFESSIONAL STATUS AND ASSOCIATED LIABILITIES, AND WHEN SUCH SERVICES ARE REQUIRED BY HUND AUTOMATION IT IS SOLICITED/PROVIDED VIA A SUBCONTRACTOR AGREEMENT WITH A INDIVIDUAL/FIRM HAVING A REGISTERED CofA (CERTIFICATE OF REGISTRATION).

HUND AUTOMATION - SUPPLIED SERVICES INCLUDING CONTROL PANEL MANUFACTURING, CUSTOM ELECTRICAL FABRICATION, FIELD WIRING, COMMISSIONING/PROGRAMMING AND CALIBRATION PROVIDED TO THE BUYER OR THE MARKETPLACE IS PERFORMED BY COMPANY EMPLOYED AND/OR SUBCONTRACTED JOURNEYMAN ELECTRICIANS, LIMITED LICENSE ELECTRICIANS and ASSOCIATED APPRENTICES, HAVING CERTIFICATION UNDER THE MANITOBA APPRENTICESHIP AND TRADES QUALIFICATIONS ACT, THE ELECTRICIAN'S LICENSE ACT and ASSOCIATED REGULATIONS.

HUND AUTOMATION - SUPPLIED PRODUCTS ARE MANUFACTURED TO LATEST "CSA" - Canadian Standards Association CODES, STANDARDS AND REGULATIONS, IN ACCORDANCE WITH HUND AUTOMATION'S "Certificate of Compliance" - Certificate Number: 187951 - 2500008683 (LR 110771-1) AND APPLICABLE REQUIREMENTS (CAN/CSA-C22.2 No. 14-95 - Industrial Control Equipment, UL Std. No. 508A - Industrial Control Panel) AND WILL BEAR THE CSA MARK, AND THE NRTL/C INDICATOR - WHERE/WHEN APPLICABLE.

LIMITS OF LIABILITY:
WE ARE NOT RESPONSIBLE FOR ANY LIABILITY OR DELAYS ARISING AS A RESULT OF INCORRECT BUYER-SUPPLIED INFORMATION OR INFORMATION WHICH IS UNCLEAR, UNSPECIFIC, UNSPECIFIED, OR CONTRADICTORY, MOREOVER, WE ARE NOT RESPONSIBLE OR OBLIGATED TO DETECT OR RECOGNIZE SUCH PROBLEMS. IN THE EVENT THAT SUCH PROBLEMS ARE DISCOVERED, WHETHER BY THE BUYER OR BY US, ANY ADDITIONAL COSTS INCLUDING TIME SPENT RELATED TO CORRECTING OR RESOLVING THE PROBLEM WILL BE CHARGED TO THE BUYER AT OUR REGULAR BILLING RATES. WE ARE NOT RESPONSIBLE FOR THE IMPROPER USE OR APPLICATION OF THE CONTROL SYSTEM (IN WHOLE AND/OR PART) WHEN BASED ON BUYER-SUPPLIED INFORMATION, DESIGNS, LIMITATIONS AND NOTWITHSTANDING ANY PROVISION IN THE CONTRACT BETWEEN US. WE MAKE NO WARRANTY GUARANTEES WHATSOEVER AS TO PERFORMANCE OF ANY SOLUTION WHERE ANY OF THE SPECIFICATIONS FOR SUCH SOLUTION ARE PROVIDED BY THE BUYER, CONTRACTOR OR ANY OTHER ENTITY OUTSIDE HUND AUTOMATION'S INFLUENCE.

REV.	DATE (MM–DD–YY)	DESCRIPTION	CAD	DESIGN	APPROVED
02	04/15/2016	AS BUILT	J.ORTLIEB	J.ORTLIEB	
01	01/15/2016	FOR SHOP DRAWING APPROVAL	J.ORTLIEB	J.ORTLIEB	

hund

HUND AUTOMATION
675 BERRY STREET, UNIT L
WINNIPEG, MANITOBA
CANADA, R3H 1A7
PHONE: 1.204.489.HUND (4863)
FAX: 1.204.772.6382
WEB: www.hundautomation.com
- HUND AUTOMATION is a division of AEC SYSTEMS LIMITED

C OF A *

* SEAL AND C OF A, ARE PROFESSIONAL ENGINEERING DESIGNATION, AS GOVERNED / ENFORCED BY THE RESPECTIVE LOCAL AUTHORITY. IN MANITOBA THIS AUTHORITY IS APEGM. WHEN THIS SERVICE IS REQUIRED BY HUND AUTOMATION, IT IS SOLICTED / PROVIDED BY A SUBCONTRACT ARRANGMENT WITH A INDIVIDUAL/ENTITY HAVING BOTH A SEAL AND A C OF A, AND IS VERIFIED TO HOLD THE REQUIRED LIABILITY AND ERRORS & OMMISSIONS INSURANCE AS MANDATED BY THE LOCAL GOVERNING BODY (MB: APEGM).

SEAL *

CLIENT: ARNASON INDUSTRIES LIMITED

PROJECT NO.: KP1215-001

PROJECT NAME: MUNICIPALITY OF RUSSELL - BINSCARTH WATER SUPPLY UPGRADE PROJECT

DRAWING NO.: **FP**

DRAWING DESCRIPTION: FRONT PAGE

HUND FILE NO:

ALL DOCUMENTS AND DRAWINGS PREPARED BY HUND AUTOMATION (div. of AEC SYSTEMS LIMITED) ARE SUBJECT TO THE TERMS AND CONDITIONS AS NOTED ON THE TITLE PAGE - IF NO TITLE PAGE IS ATTACHED CONTACT HUND AUTOMATION FOR A COPY.

RAW WATER CONTROL PANEL (RWCP-1)

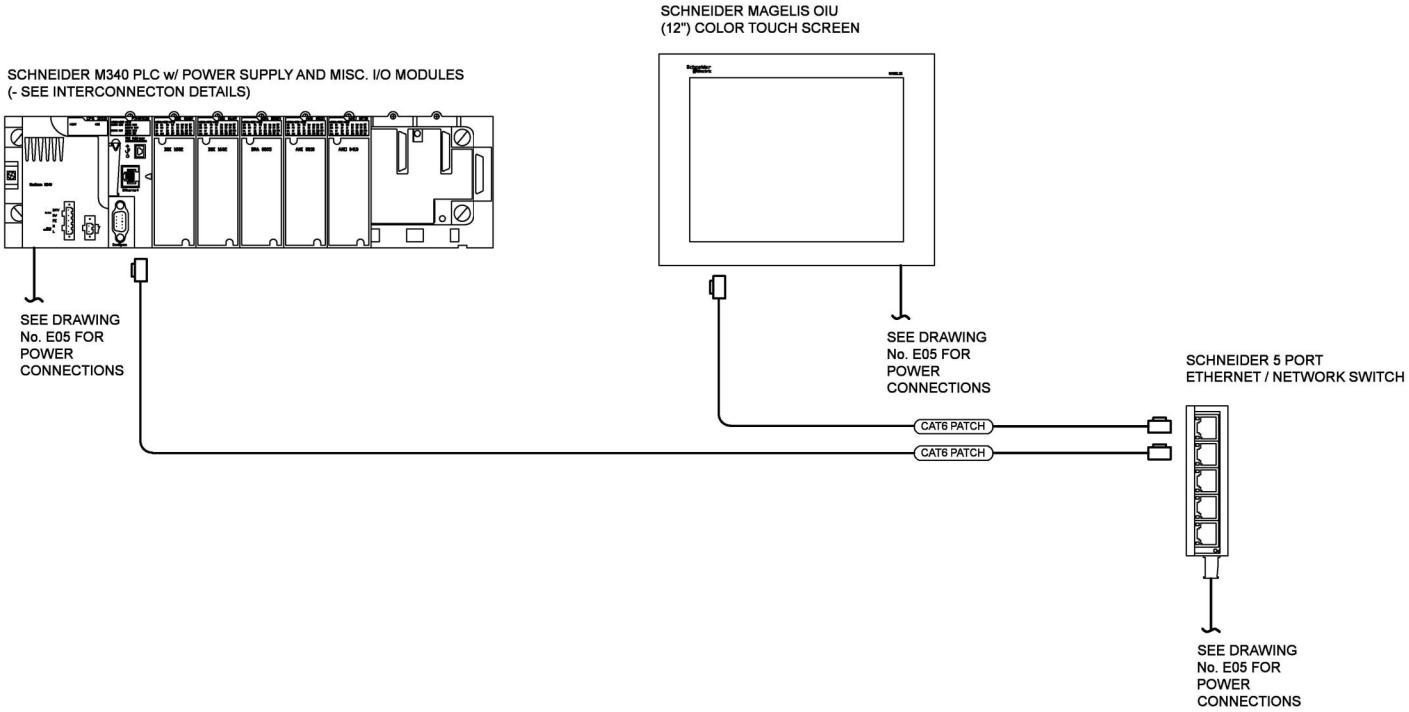

REV.	DATE (MM-DD-YY)	DESCRIPTION	CAD	DESIGN	APPROVED
02	04/15/2016	AS BUILT	J.ORTLIEB	J.ORTLIEB	
01	01/15/2016	FOR SHOP DRAWING APPROVAL	J.ORTLIEB	J.ORTLIEB	

hund

HUND AUTOMATION
675 BERRY STREET, UNIT L
WINNIPEG, MANITOBA
CANADA, R3H 1A7
PHONE: 1.204.489.HUND (4863)
FAX: 1.204.772.6382
WEB: www.hundautomation.com
- HUND AUTOMATION is a division of AEC SYSTEMS LIMITED

C OF A *

- SEAL AND C OF A, ARE PROFESSIONAL ENGINEERING DESIGNATION, AS GOVERNED / ENFORCED BY THE RESPECTIVE LOCAL AUTHORITY. IN MANITOBA THIS AUTHORITY IS APEGM. WHEN THIS SERVICE IS REQUIRED BY HUND AUTOMATION, IT IS SOLICITED / PROVIDED BY A SUBCONTRACT ARRANGEMENT WITH A INDIVIDUAL/ENTITY HAVING BOTH A SEAL AND A C OF A, AND IS VERFIED TO HOLD THE REQUIRED LIABILITY AND ERRORS & OMMISSIONS INSURANCE AS MANDATED BY THE LOCAL GOVERNING BODY (MB: APEGM).

SEAL *

CLIENT
ARNASON INDUSTRIES LIMITED

PROJECT NO.
KP1215-001

PROJECT NAME
MUNICIPALITY OF RUSSELL - BINSCARTH
WATER SUPPLY UPGRADE PROJECT

DRAWING DESCRIPTION
NETWORK / COMMUNICATIONS LAYOUT

DRAWING NO.
C01

HUND FILE NO:
ALL DOCUMENTS AND DRAWINGS PREPARED BY HUND AUTOMATION (div. of AEC SYSTEMS LIMITED) ARE SUBJECT TO THE TERMS AND CONDITIONS AS NOTED ON THE TITLE PAGE - IF NO TITLE PAGE IS ATTACHED CONTACT HUND AUTOMATION FOR A COPY.

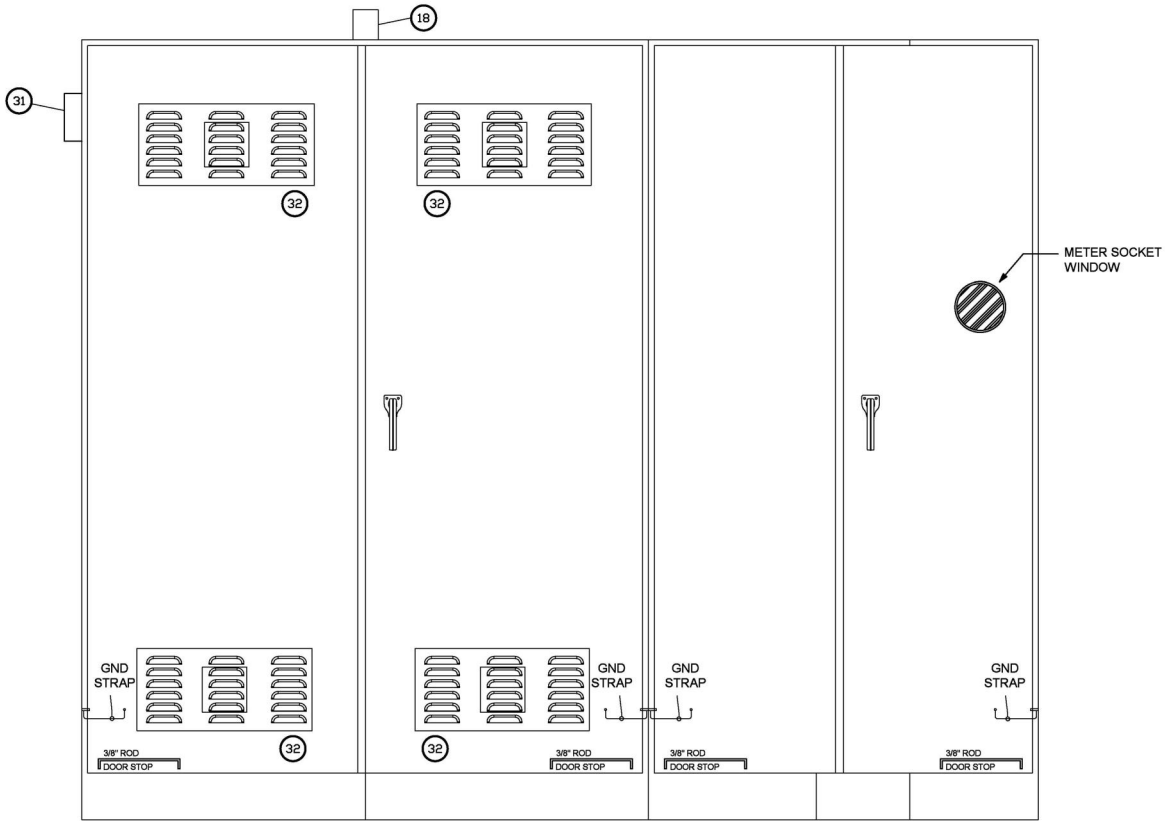

RAW WATER CONTROL PANEL (RWCP-1)
(FRONT ELEVATION - EXTERIOR ENCLOSURE DOOR CLOSED)
100" HIGH x 122 3/4" WIDE x 28" DEEP

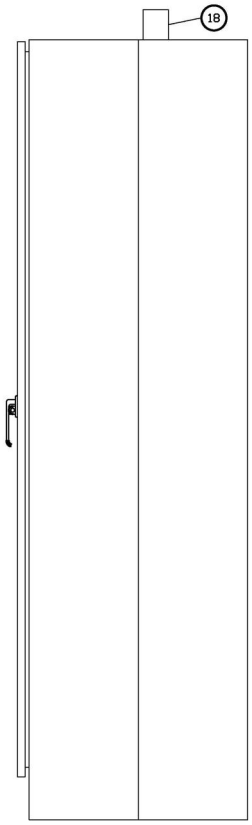

RAW WATER CONTROL PANEL (RWCP-1)
(SIDE ELEVATION - EXTERIOR ENCLOSURE DOOR CLOSED)
100" HIGH x 122 3/4" WIDE x 28" DEEP

HUND FILE NO:
ALL DOCUMENTS AND DRAWINGS PREPARED BY HUND AUTOMATION (div. of AEC SYSTEMS LIMITED) ARE SUBJECT TO THE TERMS AND CONDITIONS AS NOTED ON THE TITLE PAGE - IF NO TITLE PAGE IS ATTACHED CONTACT HUND AUTOMATION FOR A COPY.

REV.	DATE (MM-DD-YY)	DESCRIPTION	CAD	DESIGN	APPROVED
02	04/15/2016	AS BUILT	J.ORTLIEB	J.ORTLIEB	
01	01/15/2016	FOR SHOP DRAWING APPROVAL	J.ORTLIEB	J.ORTLIEB	

hund
HUND AUTOMATION
675 BERRY STREET, UNIT L
WINNIPEG, MANITOBA
CANADA, R3H 1A7
PHONE: 1.204.489.HUND (4863)
FAX: 1.204.772.6382
WEB: www.hundautomation.com
- HUND AUTOMATION is a division of AEC SYSTEMS LIMITED

C OF A *

- SEAL AND C OF A, ARE PROFESSIONAL ENGINEERING DESIGNATION, AS GOVERNED / ENFORCED BY THE RESPECTIVE LOCAL AUTHORITY. IN MANITOBA THIS AUTHORITY IS APEGM. WHEN THIS SERVICE IS REQUIRED BY HUND AUTOMATION, IT IS SOLICITED / PROVIDED BY A SUBCONTRACT ARRANGMENT WITH A INDIVIDUAL/ENTITY HAVING BOTH A SEAL AND A C OF A, AND IS VERIFIED TO HOLD THE REQUIRED LIABILITY AND ERRORS & OMMISSIONS INSURANCE AS MANDATED BY THE LOCAL GOVERNING BODY (MB: APEGM).

SEAL *

CLIENT
ARNASON INDUSTRIES LIMITED

PROJECT NO.
KP1215-001

PROJECT NAME
MUNICIPALITY OF RUSSELL - BINSCARTH
WATER SUPPLY UPGRADE PROJECT

DRAWING NO.
L01

DRAWING DESCRIPTION
PADMOUNT DISTRIBUTION / VFD / PLC ENCLOSURE

HUND FILE NO:
ALL DOCUMENTS AND DRAWINGS PREPARED BY HUND AUTOMATION (div. of AEC SYSTEMS LIMITED) ARE SUBJECT TO THE TERMS AND CONDITIONS AS NOTED ON THE TITLE PAGE - IF NO TITLE PAGE IS ATTACHED CONTACT HUND AUTOMATION FOR A COPY.

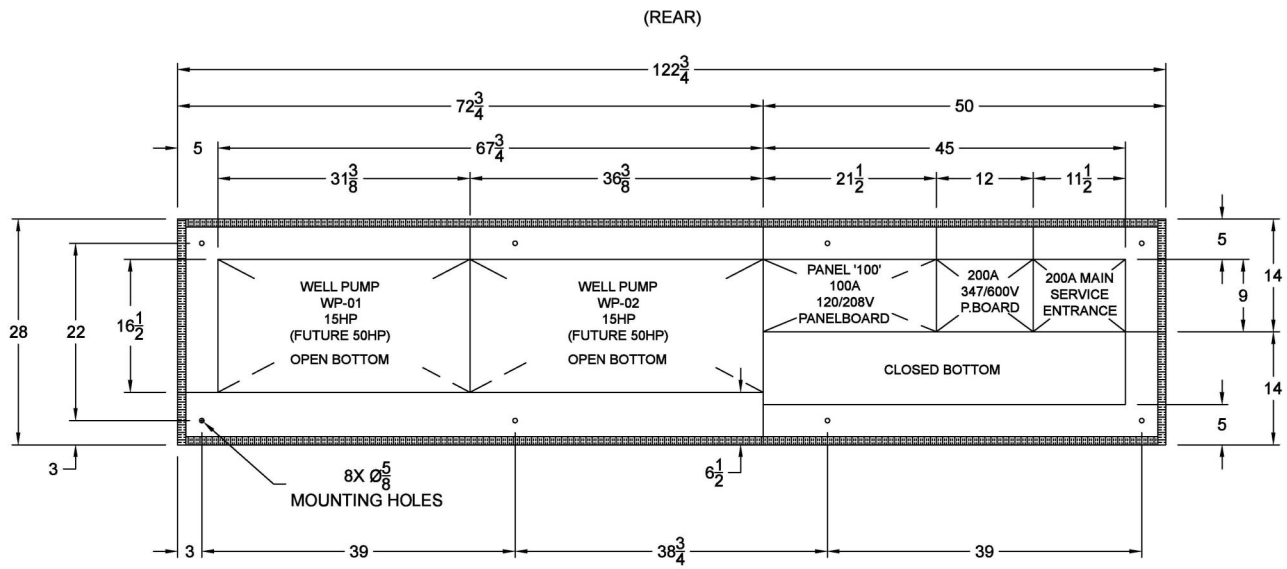

BASE DETAIL

REV.	DATE (MM–DD–YY)	DESCRIPTION	CAD	DESIGN	APPROVED
02	04/15/2016	AS BUILT	J.ORTLIEB	J.ORTLIEB	
01	01/15/2016	FOR SHOP DRAWING APPROVAL	J.ORTLIEB	J.ORTLIEB	

hund

HUND AUTOMATION
675 BERRY STREET, UNIT L
WINNIPEG, MANITOBA
CANADA, R3H 1A7
PHONE: 1.204.489.HUND (4863)
FAX: 1.204.772.6382
WEB: www.hundautomation.com
- HUND AUTOMATION is a division of AEC SYSTEMS LIMITED

C OF A *

- SEAL AND C OF A, ARE PROFESSIONAL ENGINEERING DESIGNATION, AS GOVERNED / ENFORCED BY THE RESPECTIVE LOCAL AUTHORITY. IN MANITOBA THIS AUTHORITY IS APEGM. WHEN THIS SERVICE IS REQUIRED BY HUND AUTOMATION, IT IS SOLICTED / PROVIDED BY A SUBCONTRACT ARRANGEMENT WITH A INDIVIDUAL/ENTITY HAVING BOTH A SEAL AND A C OF A, AND IS VERFIED TO HOLD THE REQUIRED LIABILITY AND ERRORS & OMMISSIONS INSURANCE AS MANDATED BY THE LOCAL GOVERNING BODY (MB: APEGM).

SEAL *

CLIENT
ARNASON INDUSTRIES LIMITED

PROJECT NO.
KP1215-001

PROJECT NAME
MUNICIPALITY OF RUSSELL - BINSCARTH
WATER SUPPLY UPGRADE PROJECT

DRAWING NO.
L02

DRAWING DESCRIPTION
PADMOUNT DISTRIBUTION / VFD / PLC ENCLOSURE
BASE DETAIL

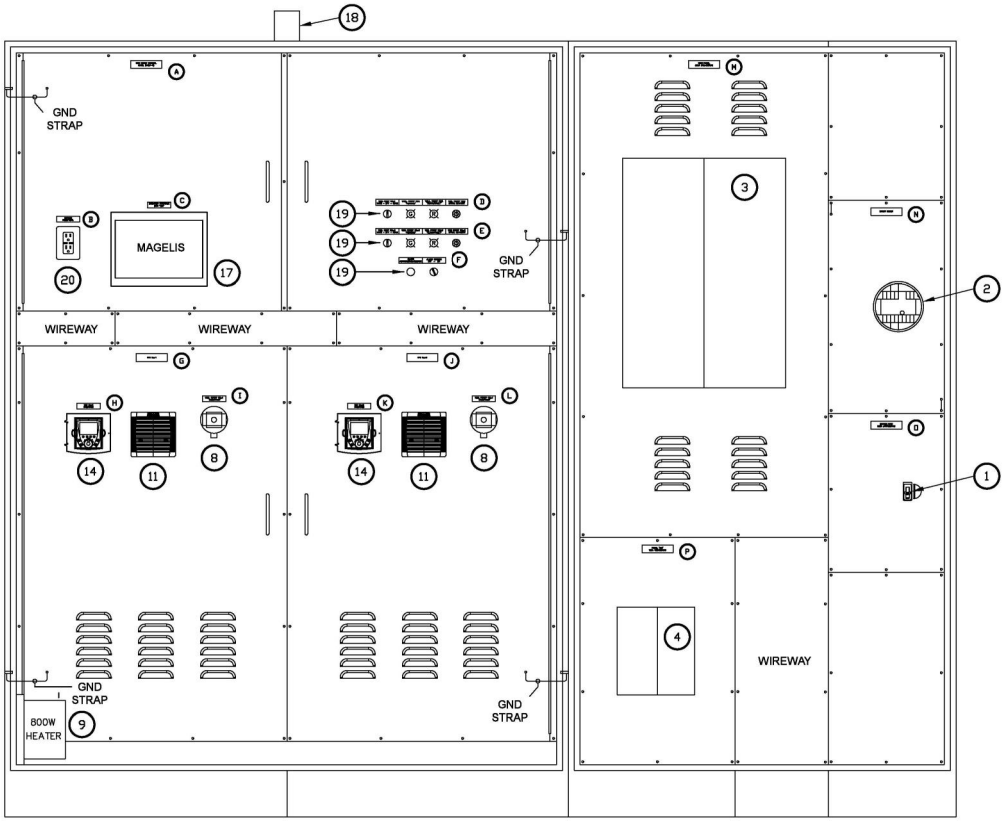

RAW WATER CONTROL PANEL (RWCP-1)
(FRONT ELEVATION - EXTERIOR ENCLOSURE DOOR CLOSED)
100" HIGH x 122 3/4" WIDE x 28" DEEP

RAW WATER CONTROL PANEL (RWCP-1)
LAMACOID NAMEPLATE DETAIL

MATERIAL: BLACK TEXTURED STOCK w/ WHITE LETTERS

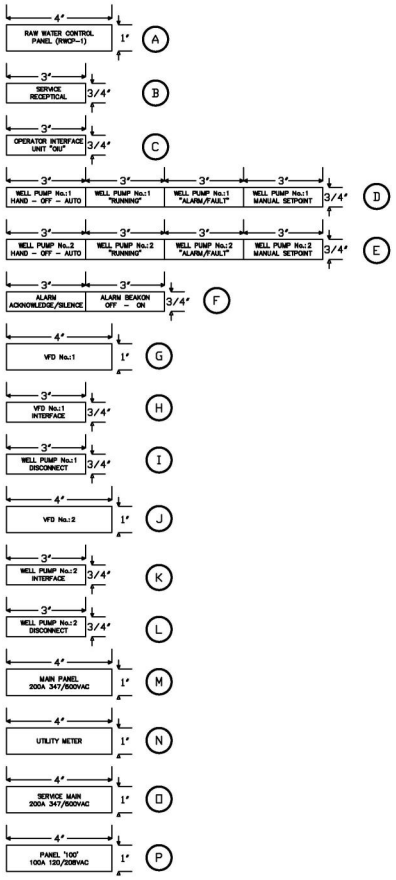

REV.	DATE (MM-DD-YY)	DESCRIPTION	CAD	DESIGN	APPROVED
02	04/15/2016	AS BUILT	J.ORTLIEB	J.ORTLIEB	
01	01/15/2016	FOR SHOP DRAWING APPROVAL	J.ORTLIEB	J.ORTLIEB	

hund

HUND AUTOMATION
675 BERRY STREET, UNIT L
WINNIPEG, MANITOBA
CANADA, R3H 1A7
PHONE: 1.204.489.HUND (4863)
FAX: 1.204.772.6382
WEB: www.hundautomation.com
- HUND AUTOMATION is a division of AEC SYSTEMS LIMITED

C OF A *

- SEAL AND C OF A, ARE PROFESSIONAL ENGINEERING DESIGNATION, AS GOVERNED / ENFORCED BY THE RESPECTIVE LOCAL AUTHORITY. IN MANITOBA THIS AUTHORITY IS APEGM. WHEN THIS SERVICE IS REQUIRED BY HUND AUTOMATION, IT IS SOLICITED / PROVIDED BY A SUBCONTRACT ARRANGMENT WITH A INDIVIDUAL/ENTITY HAVING BOTH A SEAL AND A C OF A, AND IS VERIFIED TO HOLD THE REQUIRED LIABILITY AND ERRORS & OMMISSIONS INSURANCE AS MANDATED BY THE LOCAL GOVERNING BODY (MB: APEGM).

SEAL *

CLIENT
ARNASON INDUSTRIES LIMITED

PROJECT NO.
KP1215-001

PROJECT NAME
MUNICIPALITY OF RUSSELL - BINSCARTH
WATER SUPPLY UPGRADE PROJECT

DRAWING DESCRIPTION
PADMOUNT DISTRIBUTION / VFD / PLC ENCLOSURE

DRAWING NO.
L03

HUND FILE NO:
ALL DOCUMENTS AND DRAWINGS PREPARED BY HUND AUTOMATION (div. of AEC SYSTEMS LIMITED) ARE SUBJECT TO THE TERMS AND CONDITIONS AS NOTED ON THE TITLE PAGE - IF NO TITLE PAGE IS ATTACHED CONTACT HUND AUTOMATION FOR A COPY.

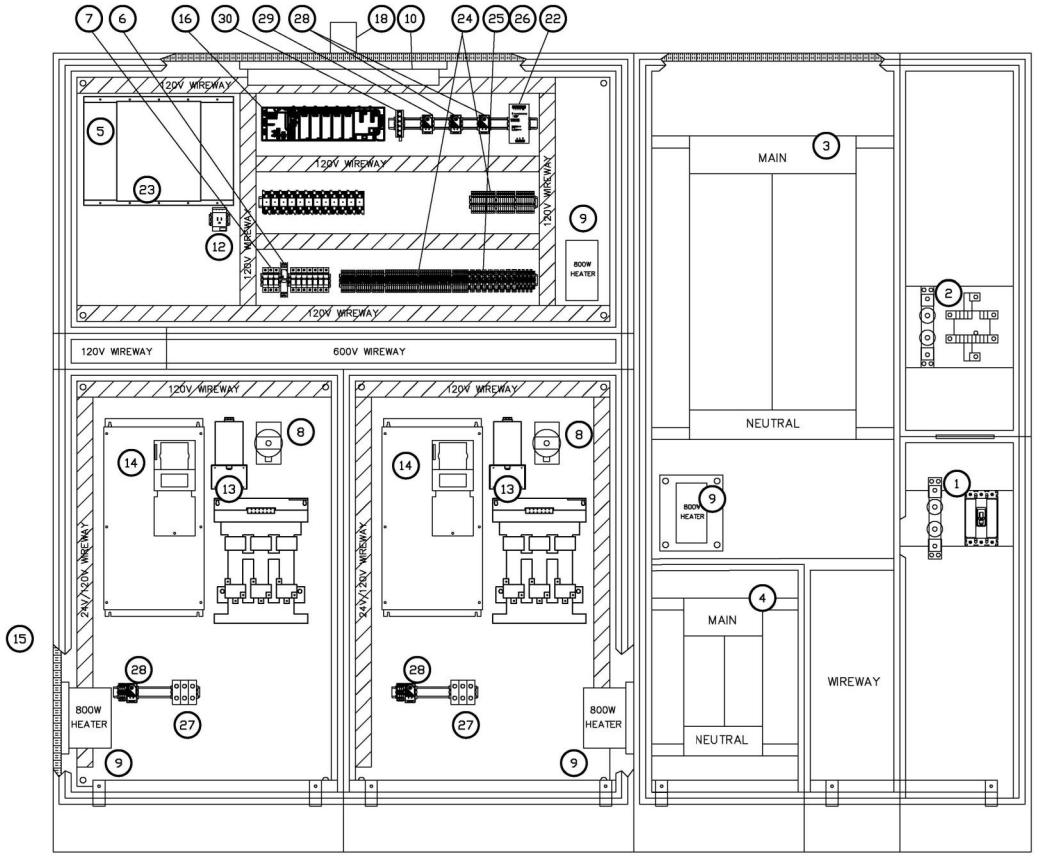

RAW WATER CONTROL PANEL (RWCP-1)
(FRONT ELEVATION - EXTERIOR ENCLOSURE INTERIOR DOORS OPEN)
100" HIGH x 122 3/4" WIDE x 28" DEEP

ITEM	QTY	MATERIAL DESCRIPTION	PART NUMBER
1	1	EATON 200A 3 POLE 22 KA RATED MAIN BREAKER C/W SE NEUTRAL ASSEMBLY	TBA
2	1	MICRO ELECTRIC 7 JAW 200A METER BASE AND SEALING RING	TBA
3	1	EATON 200A 347/600V 22KA RATED COPPER PANELBOARD C/W 1 - 200A MAIN BREAKER, 2 - 30A 3 POLE BREAKERS, 1 - 20A BREAKER 1 - 120KA TVSS INTEGRAL TO PANELBOARD	PRL3A PANEL HFD BREAKERS
4	1	PANEL '100' EATON 100A 120/208V 10KA RATED COPPER PANELBOARD C/W 15 - 15A 1 POLE BREAKERS	PRL1A PANEL BAB BREAKER
5	1	EATON 1500 VA / 900 WATT UPS	5S1500LCD
6	1	CARLO GAVAZZI POWER PHASE LOSS RELAY 600V 3 PHASE C/W AUX CONTACTS	DPA01CM60
7	1	FUSETEK 20A 600V 3P CONTROL FUSE HOLDERS C/W 2A FUSES	TBA
8	2	ROTERY SWITCH DISCONNECT	R9C3100U, SHBON12, SF320SH5X5
9	3	HAMMOND 800 WATT 120VAC HEATER C/W BUILT IN THERMOSTAT	FLHTF800A115
10	1	PHILLIPS 24" LED LIGHT FIXTURES	LF2FR1935ULAG
11	4	HAMMOND 120 VAC MUFFIN FAN AND FILTER ASSSEMBLIES	PF22000T12LG, PFA20000LG
12	1	UPS ONLY RECEPTACLE	SD-US/SC/LA/GY
13	2	MTE MATRIX AP ADAPTIVE PASSIVE HARMONIC FILTER 52 AMP 600V - (TBA)	MAPP0052E
14	2	VARIABLE SPEED DRIVES 50HP 600V C/W REMOTE DISPLAY SCREENS	D45Y
15	2	FUSETEK 20A 600V 1P CONTROL FUSE HOLDER	TBA
16	1	SCHNEIDER MODICON M340 AUTOMATION PLC WITH VARIOUS CARDS	BMXXBP1200
17	1	MAGELIS HMIGTO6310 12.1" TOUCHSCREEN	XBT GTW 450
18	1	EDWARDS RED BEACON	93(R)-N5
19	10	SCHNEIDER 22MM OPERATOR(S)	ZB4
20	2	GFCI SERVICE RECEPTICAL	GFNT1-KGY
21	11	OMRON 120VAC CONTROL RELAY	LY2
22	2	CARLO GAVAZZI 120VAC:24VDC POWER SUPPLY	SPD24120
23	1	CUSTOM UPS SHELF	TBA
24	LOT	PHOENIX CONTACT UTTB 2,5 DOUBLE TERMINAL BLOCKS, END PARTITIONS AND END CLAMPS	UTTB-4
25	8	PHOENIX CONTACT UTTB 4-TG DOUBLE TERMINAL BLOCK FOR USE WITH P-FU 5x20 LED 24 FUSE HOLDER	UTTB 4-TG
26	8	PHOENIX CONTACT P-FU 5x20 LED 24 FUSE HOLDER	P-FU 5X20 LED 24
27	2	WELL PUMP MOTOR TERMINALS	RT 8-3049042
28	1	STEGO TEMPERATURE CONTROL SWITCH COOLING STAT	KTS011
29	1	STEGO TEMPERATURE CONTROL SWITCH HEATING STAT	KTO011
30	1	ETHERNET TCP/IP UNMANAGED SWITCH	TCSESU053FNO
31	1	HONEYWELL TEMERATURE SWITCH (LOW AMBIENT CUT-OUT)	TBA
32	4	TAMCO INSULATED DAMPER W/ BELIMO ACTUATOR	TBA

REV.	DATE (MM-DD-YY)	DESCRIPTION	CAD	DESIGN	APPROVED
02	04/15/2016	AS BUILT	J.ORTLIEB	J.ORTLIEB	
01	01/15/2016	FOR SHOP DRAWING APPROVAL	J.ORTLIEB	J.ORTLIEB	

hund

HUND AUTOMATION
675 BERRY STREET, UNIT L
WINNIPEG, MANITOBA
CANADA, R3H 1A7
PHONE: 1.204.489.HUND (4863)
FAX: 1.204.772.6382
WEB: www.hundautomation.com
- HUND AUTOMATION is a division of AEC SYSTEMS LIMITED

C OF A *

- SEAL AND C OF A, ARE PROFESSIONAL ENGINEERING DESIGNATION, AS GOVERNED / ENFORCED BY THE RESPECTIVE LOCAL AUTHORITY. IN MANITOBA THS AUTHORITY IS APEGM. WHEN THIS SERVICE IS REQUIRED BY HUND AUTOMATION, IT IS SOLICITED / PROVIDED BY A SUBCONTRACT ARRANGMENT WITH A INDIVIDUAL/ENTITY HAVING BOTH A SEAL AND A C OF A, AND IS VERFIED TO HOLD THE REQUIRED LIABILITY AND ERRORS & OMMISSIONS INSURANCE AS MANDATED BY THE LOCAL GOVERNING BODY (MB: APEGM).

SEAL *

CLIENT
ARNASON INDUSTRIES LIMITED

PROJECT NO.
KP1215-001

PROJECT NAME
MUNICIPALITY OF RUSSELL - BINSCARTH
WATER SUPPLY UPGRADE PROJECT

DRAWING NO.
L04

DRAWING DESCRIPTION
PADMOUNT DISTRIBUTION / VFD / PLC ENCLOSURE

HUND FILE NO:
ALL DOCUMENTS AND DRAWINGS PREPARED BY HUND AUTOMATION (div. of AEC SYSTEMS LIMITED) ARE SUBJECT TO THE TERMS AND CONDITIONS AS NOTED ON THE TITLE PAGE - IF NO TITLE PAGE IS ATTACHED CONTACT HUND AUTOMATION FOR A COPY.