Research Article

Quality and Reliability Engineering International

(wileyonlinelibrary.com) DOI: 10.1002/qre.1296

Published online in Wiley Online Library

The Graphical Analysis for Maintenance Management Method: A Quantitative Graphical Analysis to Support Maintenance Management Decision Making

Luis Barberá Martínez,[a*] Adolfo Crespo Márquez,[a] Pablo Viveros Gunckel[b] and Adolfo Arata Andreani[c]

This article proposes a logical support tool for maintenance management decision making. This tool is called the Graphical Analysis for Maintenance Management (GAMM), a method to visualize and analyze equipment dependability data in a graphical form. The method helps for a quick and clear analysis and interpretation of equipment maintenance (corrective and preventive) and operational stoppages. Then, opportunities can be identified to improve both operations and maintenance management (short–medium term) and potential investments (medium–long term). The method allows an easy visualization of parameters, such as the number of corrective actions between preventive maintenance, the accumulation of failures in short periods of time, and the duration of maintenance activities and sequence of stops of short duration. In addition, this tool allows identifying, *a priori*, anomalous behavior of equipment, whether derived from its own function, maintenance activities, misuse, or even equipment designs errors.

In this method, we used a nonparametric estimator of the reliability function as a basis for the analysis. This estimator takes into account equipment historical data (total or partial) and can provide valuable insights to the analyst even with few available data. Copyright © 2012 John Wiley & Sons, Ltd.

Keywords: management and maintenance optimization; quantitative graphical method; graphical data analysis; efficiency and effectiveness in maintenance

1. Introduction

The development and application of graphical tools supporting decision making in the area of operational reliability[1] is a fundamental task to achieve an accurate and efficient management of assets and resources in an organization, even when there is a large number of devices with functional configuration that is highly complex. To obtain actual applications of analytical models, practical, functional, innovative, and simple tools must be generated. This will help to make tactical and operational decisions easier.

The management of physical assets of an organization involves processes of innovation and continuous improvement at all levels.[2,3] Therefore, the need for reliable information to allow appropriate study and analysis of reliability and maintainability is one of the main pillars for decision making at a tactical and operational level. Furthermore, they remain correctly aligned with the vision, strategy, and economic indicators of business.[4,5] In addition, the development of simple technical tools to facilitate the exercise of analysis and results outcome[6] provides a framework for the control and monitoring of action plans implemented in terms of maintenance activities.

This article proposes a new graphical tool on the basis of data related to the interventions sequence performed to a piece of equipment in during a time horizon. This quantitative graphical analysis method provides easy access to certain variables patterns showing useful information for maintenance management and decision making in the short, medium, and long term.

[a]*Department of Industrial Management, School of Engineering, University of Seville, Camino de los Descubrimientos s/n. 41092, Seville, Spain*
[b]*Department of Industrial Engineering, Universidad Técnica Federico Santa María, Avenida España 1680, Valparaíso, Chile*
[c]*Escuela de Ingeniería Industrial, Pontificia Universidad Católica de Valparaíso, Avenida Brasil 2950, Valparaíso, Chile*
**Correspondence to: Luis Barberá Martinez, Department of Industrial Management, School of Engineering, University of Seville, Camino de los Descubrimientos s/n. 41092, Seville, Spain.*
[†]*E-mail: lbm@esi.us.es*

Copyright © 2012 John Wiley & Sons, Ltd.

2. Problem statement

A typical problem when generating and controlling action plans for improving reliability and maintainability of equipment is primarily the lack of practical mechanisms to support maintenance management. In particular, there is a need for tools to illustrate, in a clear and simple way, the patterns of deficiencies that can be found in the equipment performance.

Overall indicators of maintenance management (e.g. mean time between failures, mean time to repair, availability, and reliability, among others) are, besides the consequence or effect of failure, the base to determine the equipment criticality (based on criticality ranking) and to provide system-level guidelines for the allocation of technical and economic resources. However, these indicators do not bring out the performance problems of the actual maintenance, operation, design, and so forth.

It is therefore necessary to design control tools aimed at improving the detection of issues affecting the reliability and maintainability, in turn allowing answers to, for example, the questions shown in Table I.

Moreover, usually that the lack of information and its quality makes the accomplishment of the reliability analysis difficult. For what it was previously commented, the tool designs that allow a simple interpretation and analysis are even more necessary to improve operational performance in the global system, thereby maximizing achievable benefits.

3. Context of the used data

For the development of this article, we used actual data from a process of the extraction and filtration of solids in a wastewater treatment plant located in Chile. In this process, the goal is the elimination of existing solid waste in the fluid using different extraction and filtering systems, in the function of the size of the solids. Specifically, we used data from a piece of equipment named Grid 1, a specific machine for mid-size residue (Figure 1).

The grid is powered by three cables, two for moving and one for opening and closing of the rake. In turn, the grid filter is composed of the following elements:

a Support structure with two side rails that allow the movement of the cleaning rake.
b Start button, located at the gear motor (which activates the movement cables of the rake), the hydraulic system (which runs the opening and closing thereof), switches the automatic and the rake cleaning system.
c Mobile cleaning kit.
d Electric diagram.

A screw conveyor is used to proceed with the removal of waste.

4. Dispersion diagram

The Nelson–Aalen dispersion diagram is a graphical representation of the cumulative number of interventions N versus time t_i. This diagram should be the starting point for any analysis of reliability because it shows the spatial distribution and trend data versus time, $N(t_i)$.[7] The construction of the graph may be performed on a complete or censored historical data, using dispersion diagrams.

Table II shows the full actual historical data of interventions in a piece of equipment with additional indication of whether the intervention was corrective or preventive, the latter identified with an asterisk (*). Preventive interventions are for censored data through the right side because the equipment is intervened before the failure occurs or corrective intervention, that is, the range of real-time operation of the equipment is interrupted. Therefore, in the development of this document, all preventive intervention will be considered as a censored data.[6]

Considering the data in Table II, the dispersion diagram can generate the cumulative number of operations $N(t_i)$ versus time t (Figure 2).

The information provided in the scatter diagram (Figure 2) refers to the trend of $N(t_i)$. In particular, with the data used, the diagram shows a function that presents a linear trend, that is, the time between interventions has the same expected value or is a stationary system. In addition, the linear trend of the function allows to assume the possibility of enforcing the i.i.d. hypothesis[7] (time between

Table I. Important questions for maintenance management

1	How many corrective interventions (frequency) are made between planned preventive interventions?
2	Is the execution of maintenance tasks correct?
3	Does the equipment operate properly?
4	What is the trend in the timescale of the interventions?
5	What is the deviation between the optimal execution frequencies of the preventive maintenance?
6	Are the repair times consistent in relation to the amount of work associated with it?
7	Is the number of interventions consistent with the life cycle of the piece of equipment?
8	How do the waiting times of spare parts affect the repair times?
9	Is the maintenance staff training adequate to implement the maintenance strategy for the equipment?
10	What is the effect of outsourcing on the reliability and maintainability of the equipment?

Copyright © 2012 John Wiley & Sons, Ltd.

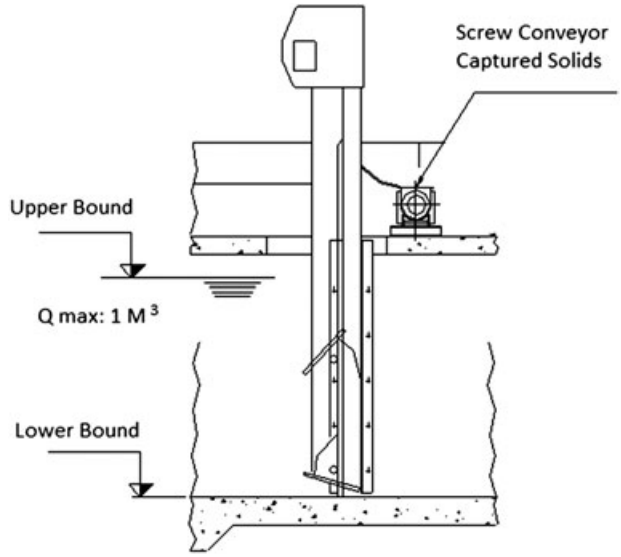

Figure 1. Filtering Grid 1 for medium-sized solid residues

Table II. Historical of Interventions 1

$N(t_i)$	T_i (h)	$N(t_i)$	T_i (h)	$N(t_i)$	T_i (h)	$N(t_i)$	T_i (h)	$N(t_i)$	T_i (h)
1*	311	11	4354	21*	6727	31*	8476	41	11659
2	504	12	4375	22	6790	32*	9031	42*	11755
3	663	13	4500	23*	6821	33*	9343	43*	12194
4*	1481	14*	4669	24	7132	34	9646	44*	12523
5*	2153	15*	4672	25*	7137	35	9816	45*	12840
6*	2824	16	5052	26*	7499	36	10029	46*	13720
7*	3975	17*	5319	27	7735	37*	10726	47*	14087
8	4027	18	5689	28	7802	38*	11207	48	14103
9	4138	19*	5791	29*	7826	39*	11211	49*	14415
10*	4289	20*	6633	30*	8240	40*	11564	–	–

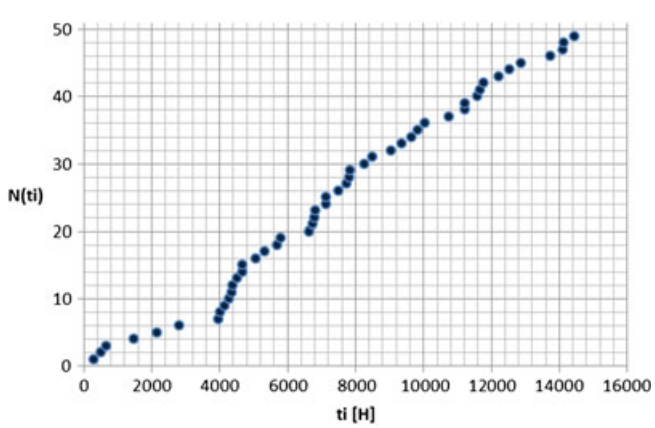

Figure 2. Dispersion diagram of cumulative number of operations $N(t_i)$

interventions independent and identically distributed) but is not certain. Independent of the result of the hypothesis, this will determine the use of methods of parametric analysis or nonparametric analysis.

A parametric-type approach assumes that the function belongs to a particular class of functions, making it possible to assign a generic probability distribution on the basis of previous experience or theoretical considerations.[7] By contrast, a nonparametric-type approach is generally assumed that the function belongs to a group of infinite dimensional function, for example, due to the lack of data. Therefore, the distribution or generated curve by a nonparametric analysis is particularized to each individual case.

On the other hand, if the curve of the function $N(t_i)$ is concave or convex, the use of parametric methods based on the performance of the i.i.d. hypothesis would be inappropriate because, as mentioned, there is a linearity requirement.

Copyright © 2012 John Wiley & Sons, Ltd.

In summary, the dispersion diagrams as a starting point of any analysis of reliability provide graphic information only on the trend of the function $N(t_i)$. This determines the linear and nonlinear behavior and finally determines the enforceability of i.i.d. hypothesis. Subsequently, it is not possible to obtain additional relevant information to support and justify decisions at the operational level.

5. Graphical Analysis for Maintenance Management

The Graphical Analysis for Maintenance Management (GAMM) proposed is a quantitative and qualitative analysis method that intends to support decision making in maintenance management using the logic of a dispersion diagram, stated before, but also integrating the following variables: type of intervention, duration of intervention, and state of equipment/system during the intervention. The combination of these new variables with a graphic display of the sequence of interventions generates synergies with regard to the information given by the diagram, thus establishing new sources of analysis.

5.1. Analytical framework of the GAMM method

As mentioned and described within the conceptual framework, new variables to consider are added (considering the historical data of interventions illustrated in Table II): the duration of interventions and the status of equipment/system at the time to intervene. Consequently, the new history of interventions is shown in Table III.

Thus, the columns of Table III represent the following:

- $N(t_i)$: cumulative number of interventions, T
  - The data marked with an asterisk represent preventive interventions.
  - The data without an asterisk represent the corrective measures.
- t_i: cumulative run time in hours, the total time without discounting the interventions times.
- Δt: duration of intervention, expressed in hours.
- Det: state of the system during the intervention.
  - Value 1: the equipment/system does not stop during the intervention.
  - Value 0: The equipment/system is stopped during intervention.

In Table IV, the time of the correct function of equipment has been calculated (time between failures [TBF]). This parameter is calculated considering the existence or nonexistence of detention of the equipment in its intervention:

- T_i (h): accumulated time (calendar time in hours).
- TBF_i: time of correct function (time between failures).

When the intervention N_{i-1} stops (Det = 0), the calculation is $\mathrm{TBF}_i = T_i - T_{i-1} - \Delta t_{i-1}$.
When the intervention N_{i-1} does not stop (Det = 1), the calculation is $\mathrm{TBF}_i = T_i - T_{i-1}$.

5.2. Reliability analysis based on the GAMM method

In addition, GAMM is able to estimate the reliability function, which is calculated using the algorithms on the basis of the nonparametric method of Nelson–Aalen[7] and evaluated in the time t_i, that is, in the moment before the intervention. The estimation method can consider both the historic full data and the censored historical data.[6] The Nelson–Aalen estimator for the cumulative failure rate, which considers censored data on the right side, is expressed in Equation (1).

$$Z(t) = \sum_{v} \frac{1}{n - v + 1} \tag{1}$$

where[7] $Z(t)$ is the cumulative failure rate, n is the total number of interventions recorded in the history, and v is equal to the parameter i, which represents the sequential number of each intervention.

The GAMM estimator for the cumulative failure rate is expressed in Equation (2)

$$Z(t_i) = \begin{cases} Z(t_{i-1}) + \dfrac{1}{n - i + 1} & \text{if the event } i \text{ is a failure} \\ Z(t_{i-1}), & \text{otherwise (preventive maitenance)} \end{cases} \tag{2}$$
$$\text{with } Z(t_0) = 0$$

Therefore, the estimator of the reliability function is given by Equation (3),

$$R(t_i) = e^{-Z(t_i)} \tag{3}$$

where[7] $R(t_i)$ is the reliability function and $Z(t_i)$ is the cumulative failure rate.

By organizing the times between interventions TBF, lowest to highest,[7] Table V shows the estimates calculated using Equations (2) and (3).

Copyright © 2012 John Wiley & Sons, Ltd.

Table III. History of interventions, duration, and condition of the equipment intervened

$N(t_i)$	T_i (h)	Δt (h)	Det	$N(t_i)$	T_i (h)	Δt (h)	Det	$N(t_i)$	T_i (h)	Δt (h)	Det	$N(t_i)$	T_i (h)	Δt (h)	Det	$N(t_i)$	T_i (h)	Δt (h)	Det
1*	311	1	1	11	4354	1	0	21*	6727	2	0	31*	8476	1	0	41	11659	1	0
2	504	1	1	12	4375	5	0	22	6790	2	0	32*	9031	1	0	42*	11755	6	0
3	663	1	0	13	4500	5	1	23*	6821	16	1	33*	9343	1	0	43*	12194	1	0
4*	1481	4	1	14*	4669	2	0	24	7132	1	0	34	9646	1	0	44*	12523	1	0
5*	2153	1	1	15*	4672	2	0	25*	7137	4	1	35	9816	25	0	45*	12840	1	0
6*	2824	1	0	16	5052	1	1	26*	7499	1	1	36	10029	5	0	46*	13720	1	0
7*	3975	1	1	17*	5319	4	1	27	7735	1	0	37*	10726	3	0	47*	14087	7	0
8	4027	1	0	18	5689	1	0	28	7802	2	0	38*	11207	1	0	48	14103	1	0
9	4138	20	0	19*	5791	10	0	29*	7826	4	1	39*	11211	2	0	49*	14415	4	0
10*	4289	1	1	20*	6633	1	0	30*	8240	1	0	40*	11564	1	0	–	–	–	–

Copyright © 2012 John Wiley & Sons, Ltd.

Table IV. History of interventions with TBF

$N(t_i)$	T_i (h)	TBF (h)	Δt (h)	Det	$N(t_i)$	T_i (h)	TBF (h)	Δt (h)	Det	$N(t_i)$	T_i (h)	TBF (h)	Δt (h)	Det	$N(t_i)$	T_i (h)	TBF (h)	Δt (h)	Det
1*	311	311	1	1	14*	4669	169	2	0	27	7735	236	1	0	40*	11564	351	1	0
2	504	193	1	1	15*	4672	1	2	0	28	7802	66	2	0	41	11659	94	1	0
3	663	159	1	0	16	5052	378	1	1	29*	7826	22	4	1	42*	11755	95	6	0
4*	1481	817	4	1	17*	5319	267	4	1	30*	8240	414	1	0	43*	12194	433	1	0
5*	2153	672	1	1	18	5689	370	1	0	31*	8476	235	1	0	44*	12523	328	1	0
6*	2824	671	1	0	19*	5791	101	10	0	32*	9031	554	1	0	45*	12840	316	1	0
7*	3975	1150	1	1	20*	6633	832	1	0	33*	9343	311	1	0	46*	13720	879	1	0
8	4027	52	1	0	21*	6727	93	2	0	34	9646	302	1	0	47*	14087	366	7	0
9	4138	110	20	0	22	6790	61	2	0	35	9816	169	25	0	48	14103	9	1	0
10*	4289	131	1	1	23*	6821	29	16	1	36	10029	188	5	0	49*	14415	311	4	0
11	4354	65	1	0	24	7132	311	1	0	37*	10726	692	3	0					
12	4375	20	5	0	25*	7137	4	4	1	38*	11207	478	1	0					
13	4500	120	5	1	26*	7499	362	1	1	39*	11211	3	2	0					

Copyright © 2012 John Wiley & Sons, Ltd.

Table V. Estimates of cumulative failure rate and reliability function

i	TBF (h)	1 / (n − *i* + 1)	$Z(t_i)$	$R(t_i)$	*i*	TBF (h)	1 / (n − *i* + 1)	$Z(t_i)$	$R(t_i)$
1*	1	0.02	0	1	14*	95	0.028	0.17	0.844
2*	3	0.021	0	1	15*	101	0.029	0.17	0.844
3*	4	0.021	0	1	16	110	0.029	0.199	0.819
4	9	0.022	0.022	0.978	17	120	0.03	0.23	0.795
5	20	0.022	0.044	0.957	18*	131	0.031	0.23	0.795
6*	22	0.023	0.044	0.957	19	159	0.032	0.262	0.77
7*	29	0.023	0.044	0.957	20*	169	0.033	0.262	0.77
8	52	0.024	0.068	0.934	21	169	0.034	0.296	0.744
9	61	0.024	0.092	0.912	22	188	0.036	0.332	0.717
10	65	0.025	0.117	0.889	23	193	0.037	0.369	0.691
11	66	0.026	0.143	0.867	24*	235	0.038	0.369	0.691
12*	93	0.026	0.143	0.867	25	236	0.04	0.409	0.664
13	94	0.027	0.17	0.844	26*	267	0.042	0.409	0.664

It can be assumed that when a unit is subjected to a maintenance operation, it retrieves the highest reliability comparable with that in the time of acquisition, that is, a reliability $R(t)$ equals 1.[8] With all this information, the reliability function shown in Figure 3 is obtained. Thus, from the graph, the reliability can be acquired at the moment immediately before the intervention.

The graphic (Figure 3) shows a decrease in the reliability of equipment in relation to time of correct function, that is, the reliability decreases as the equipment function time increases, reaching very low levels of reliability, close to 55%.

5.3. Graphical analysis based on the GAMM method

Considering the new variables, an algorithm is programmed to enable a quantitative and qualitative graphic analysis, which replaces the dispersion diagram (Figure 2) for a bubble chart (Figure 4) with the following considerations:

- The dispersion of the bubbles represents the same function (dot to dot) as the dispersion diagram of the cumulative number of interventions $N(t_i)$ proposed in Figure 2.
- The size (diameter) of the bubbles plotted represents the duration of the intervention.
- The color of the bubbles represents the type of maintenance performed on equipment: white (preventive maintenance) and gray (corrective maintenance).
- The edge or boundary line of each bubble represents the state of the equipment/system during intervention. Thus, if the bubble has a hard shaded contour line, the value of the variable 'Det' is 0, that is, the intervention involves a stop of the equipment/system. However, if the bubble has a thin contour line, the value of the variable 'Det' is 1, that is, the intervention is performed without stopping the machine.

Finally, we constructed the first graphic of the GAMM, considering all the features described earlier. The proposed graphical method is presented in Figure 4.

Noting the dispersion of the bubbles, which represent the accumulated number of interventions $N(t_i)$, there is a clear upward trend with a sharp increase in the number of interventions depending of the time. Also, there are a large number of corrective interventions (nonprogrammed interventions, in gray color) clearly important because they are mostly of long duration involving, in most cases, the stop of the system.

Figure 5 provides further information, from the graph in Figure 4, to show the reliability of the equipment in the instant before the intervention, either corrective or preventive (from Equation (2)). Thus, we can correlate each of the interventions with the existing level of reliability in the equipment prior to it. This way, through the quantitative and qualitative analysis, on the basis of the lecture and interpretation of the results of both charts, relevant information to aid decision making in the global maintenance management can be obtained.

Figure 5 shows values of reliability (with great variation between them) versus time. In addition, it appears that the high numbers of corrective interventions are made mainly in periods of high reliability of the equipment. These two facts are particularly relevant for further analysis due to the following:

- A correct maintenance management should ensure that the value of the reliability of the system or maintained equipment is close to a value (close to 1) more or less constant over time. In practice, the reliability values vary with time, but they should not do so in sudden or large fluctuations.
- Preventive maintenance interventions are carried out in periods of high reliability of the equipment, which is why the aim of these is to prevent the value of the reliability to decrease. On the other hand, the corrective interventions (in its case) are usually carried out in periods of low reliability of equipment (achieved by an ineffective preventive maintenance program). This low reliability is the reason for the occurrence of a failure event which forces to perform a corrective maintenance intervention.

One of the possible causes of the observed variability, in the value of reliability, may be due to inadequate planning of a preventive maintenance on the basis of the evolution of the reliability of the equipment itself. Carrying out maintenance that is preventive,

Copyright © 2012 John Wiley & Sons, Ltd.

Table V. (Continued)

i	TBF (h)	1 / (n − i + 1)	$Z(t_i)$	$R(t_i)$	i	TBF (h)	1 / (n − i + 1)	$Z(t_i)$	$R(t_i)$
27	302	0.043	0.453	0.636	40*	433	0.1	0.581	0.559
28	311	0.045	0.498	0.608	41*	478	0.111	0.581	0.559
29*	311	0.048	0.498	0.608	42*	554	0.125	0.581	0.559
30*	311	0.05	0.498	0.608	43*	671	0.143	0.581	0.559
31*	311	0.053	0.498	0.608	44*	672	0.167	0.581	0.559
32*	316	0.056	0.498	0.608	45*	692	0.2	0.581	0.559
33*	328	0.059	0.498	0.608	46*	817	0.25	0.581	0.559
34*	351	0.063	0.498	0.608	47*	832	0.333	0.581	0.559
35*	362	0.067	0.498	0.608	48*	879	0.5	0.581	0.559
36*	366	0.071	0.498	0.608	49*	1150	1	0.581	0.559
37	370	0.077	0.575	0.563					
38	378	0.083	0.581	0.559					
39*	414	0.091	0.581	0.559					

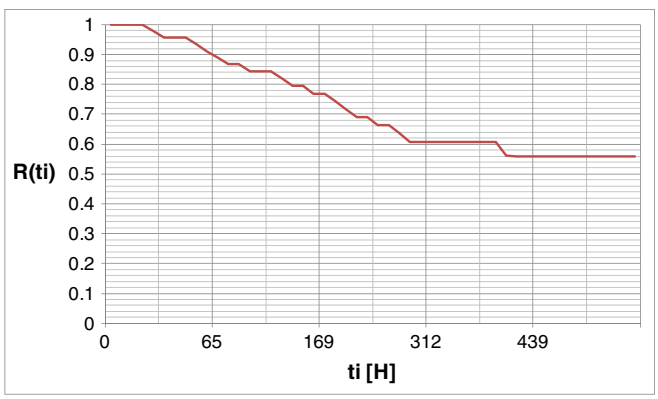

Figure 3. Reliability function $R(t_i)$

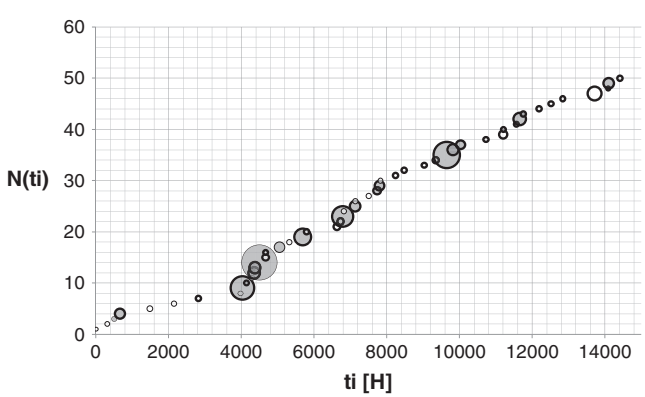

Figure 4. GAMM, Graphic 1

unscheduled, and not optimized causes the equipment reliability to be far from the appropriate and constant value in the timescale. This hypothesis is reinforced on the one hand, noting the existence of preventive interventions during periods of low reliability of the equipment (Figure 5), and on the other hand, noting the absence of a consistent temporal pattern of time between preventive interventions because of advanced planning (Figure 4).

There are also other reasons that add dispersions in the values of the reliability of equipment, for example, the corrective interventions. Such interventions are not programmable, although they can be minimized substantially with an optimized preventive maintenance program.

Moreover, the existence of a large number of corrective interventions, many of them high impact (duration and stop of the equipment, Figure 4) during periods of high reliability of equipment, may be due to poor operation of equipment by staff responsible for its operation.

Copyright © 2012 John Wiley & Sons, Ltd.

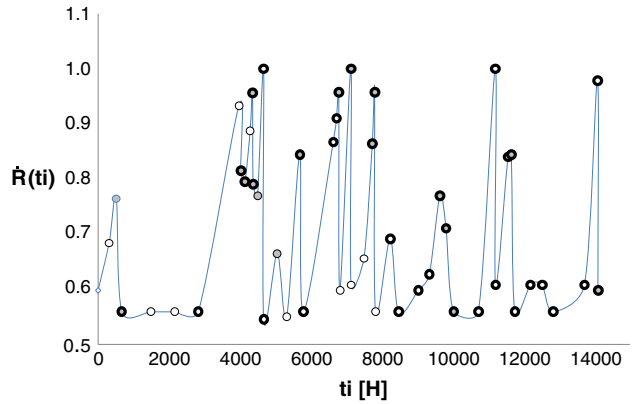

Figure 5. GAMM, Graphic 2. Estimated reliability diagram of the equipment at the moment of its intervention

The GAMM method (joint analysis of Figures 4 and 5) offers practical and relevant information about the effectiveness and efficiency of current maintenance performed to equipment or analyzed system. Thus, quantitative and qualitative analysis shows important aspects such as number of procedures performed in the timeline, type of intervention performed (preventive or corrective), duration of intervention, whether or not stopping the equipment during the intervention, reliability of equipment before the intervention, or variability of the reliability of equipment in terms of time. Also, it is important to mention that this method requires some level of experience in the maintenance area because there is some implicit qualitative analysis that will depend directly about the interpretation of the quantitative results.

5.4. Contributions and improvements obtained that support decision making for optimal maintenance management

The proposed method (GAMM) allows viewing, from a complete or censored historical record of maintenance interventions performed on the system or equipment analyzed, different patterns of analysis that provide useful information to assist decision making at the operational level. Thus, the patterns identified are as follows:

- *Trends in the behavior of the interventions*: the GAMM allows viewing the trend of the function of the cumulative number of interventions versus calendar time. The approximate behavior of the function $N(t_i)$ (linear, concave, or convex) will determine if the equipment/system is in stationary or nonstationary operation stage. This shows the temporal distribution of time between interventions. For a stationary system, the function $N(t_i)$ is linear; the time between interventions is distributed according to a determined expected value and for systems whose function $N(t_i)$ is nonlinear, concave, or convex, and the time between interventions tends to increase or decrease depending on t_i, respectively. Thus, the behavior of the function $N(t_i)$ provides information about the enforceability of the i.i.d. hypothesis, which eventually involves the use of parametric or nonparametric methods of analysis.[7]
- *Preventive maintenance deviation*: the first contribution of the operational maintenance management that can be extracted from GAMM is the relative information about possible deviations of preventive maintenance. Adding variable analysis as the type of intervention can display the frequency of completion of preventive or programmed maintenance (white bubble) and therefore can track and monitor the attainment of the established preventive maintenance frequencies in the program.
- *Quality of operations and/or preventive maintenance*: a graphic display of interventions by type (preventive or corrective) provides the sequence recognition of certain patterns that can define the quality of operation and/or the performing preventive maintenance activities. This way, by observing corrective interventions within preventive ones, sequences of corrective short-term stoppages and accumulation of corrective interventions immediately follow a preventive maintenance intervention; the existence of problems in the execution of the duties or how the equipment/systems operates is evident. This provides a knowledge base to identify opportunities for improvement but does not determine exact causes. Therefore, it should be taken into account in the formulation of hypotheses factors such as equipment/system in the continuing stage, low-quality parts, design problems, and so forth.
- *Reliability function*: The GAMM shows the reliability function of the equipment/system calculated from the estimates. Graphic 2 (reliability diagram, Figure 5) shows the reliability of the equipment/system at preintervention, complementing the analysis of the quality of operation and/or preventive maintenance. This demonstrates, for example, the existence of corrective measures in periods of high levels of reliability. Corrective intervention at a high level of reliability indicates abnormal premature failure, which may be motivated by different causes: problems in the quality of duties and/or improper operation of equipment by the staff, poor quality of parts used in preventive maintenance, and design issues, among others. Finally, the value of the reliability of the system or maintained equipment should approach a value (close to 1) more or less constant over time, demonstrating adequate frequencies of preventive maintenance with preventive interventions to a predetermined level of reliability and corrective interventions with a low frequency of occurrence.
- *Efficiency and quality in the implementation of interventions*: the duration of each intervention is represented by the size of the bubble in GAMM (Graphic 1). This variable identifies those interventions that are beyond the average times of intervention,

Copyright © 2012 John Wiley & Sons, Ltd.

questioning if the schedule of the workload is right or if the deviation in execution times is due to external factors such as lack of tools, waiting for parts, lack of staff training, and so forth.

- *Impact on production*: the stop variable (Det) determines the status of equipment/system at the time to intervene. The bubbles with hard shaded border represent interventions in which the equipment/system stops, affecting their individual availability and possibly affecting the overall system availability. Analyzing the Graphic 1 of the GAMM (Figure 4), it demonstrates the effect of the intervention on the availability of equipment, that is, if the equipment/system loses its functionality during the intervention, either preventive or corrective.
- *Opportunistic maintenance management*: 'opportunistic maintenance' or 'convenience maintenance' refers to the situation in which preventive maintenance is carried out at opportunities.[9] For this analysis, a typical example is when one component is out for maintenance and another component is taken out for maintenance ahead of the maintenance plan because it is considered to be rational, considering the information about the level of reliability, interpreted as the expected remaining life too, provided by the Graphic 2 in Figure 5.

Finally, the GAMM proposed is a quantitative and qualitative analysis that intends to support the decision making in the overall maintenance management, which helps to reduce the high costs of unavailability of the system or the maintained equipment as well as the costs associated with unforeseen maintenance interventions. The combination of analysis patterns presented provides valuable information to implement action plans to improve the global maintenance management. This specifically included the performance of equipment/systems and, ultimately, to achieve a management that is efficient, effective, and opportunistic, identifying gaps to help determine the root causes thereof.

6. Conclusions

In relation to the stated objectives, it can be concluded that GAMM is a support tool for operational maintenance management of short and medium term. The tool provides useful information regarding the reliability and maintainability of systems or equipment for analysis when considering variables such as type of intervention, duration of intervention, or existence of a stop during the intervention of the equipment/system. This broadens the spectrum display for maintenance management, acquiring new evaluation parameters and graphically determining possible areas of improvement.

The graphics of GAMM (Figures 4 and 5) illustrate aspects such as trend of the interventions, deviation in the frequency of preventive interventions, reliability function, efficiency of maintenance operations, impact by unavailability, quality in the intervention performance, quality in use, and operation of equipment by staff responsible of it, among others. However, possible variables such as continuing equipment, poor design, lack of staff training, and so forth, should be considered in formulating of hypotheses for the search of possible causes.

According to Table I, important questions for maintenance management can be answered partial or in a complete way within the presented GAMM method. For example:

- Question 1: 'the number of intervention between planned preventive interventions' can be answered analyzing the graphics presented in Figures 4 and 5. It is a simple counting process.
- Questions 2 and 3: 'if the execution of maintenance and property operation were correct' can be preliminary answered by analyzing the time between failure TBF_i and the reliability $R(t_i)$ of the asset at the moment of the intervention. The main idea is to identify if those indicator are normal (close to the average of TBF and with an acceptable reliability level).
- Question 4: 'the existence of trend in the timescale of the intervention' can be identified through a visual analysis of the graphs presented in Figures 2 and 4.

In general, the others questions could be partially answered by the analysis of the GAMM graphics and some indicators related to reliability and maintainability features. For successful results, the experience and advanced knowledge about maintenance management process should be strictly necessary.

Thus, the tool proposed provides information that is useful, clear, and easy to interpret. This way it can show quantitative and qualitative maintenance implemented activities and its operational implications in the reliability and maintainability of the equipment within the maintenance management process.

With regard to the applicability of this method, it is necessary to clarify that a relatively simple database is required for the diagrams elaboration, also consider all the variables involved: cumulative time of intervention, duration of intervention, and state of the equipment/system during intervention. To process information, common calculus tools can be used, such as VBA (Visual Basic of Applications) programming (spreadsheet) that generates a simple algorithm which allows the elaboration of graphics that are part of the support tool presented.

Acknowledgements

The authors would like to thank the work of the reviewers for their contribution to the quality of this paper. This research is funded by the Spanish Ministry of Science and Innovation, Project EMAINSYS (DPI2011-22806) "Sistemas Inteligentes de Mantenimiento. Procesos emergentes de E-maintenance para la Sostenibilidad de los Sistemas de Producción, besides FEDER funds. The research

Copyright © 2012 John Wiley & Sons, Ltd.

work was performed within the context of iMaPla (Integrated Maintenance Planning), an EU-sponsored project by the Marie Curie Action for International research Staff Exchange Scheme (project acronym PIRSES-GA-2008-230814 iMaPla).

References

1. Birolini A. *Reliability Engineering*, (5th edn). Springer: Berlin Heidelberg New York, 2007. ISBN 978-3-540-49388-4.
2. Crespo Márquez A, Gupta J. Contemporary Maintenance Management. Process, Framework and Supporting Pillars. *Omega* 2006; **34**(3):325–338.
3. Crespo Márquez A, Moreu P, Gómez J, Parra C, González Díaz V. *The maintenance management framework: A practical view to maintenance management*. Taylor & Francis Group: London, 2009. ISBN 978-0-415-48513-5.
4. Arata A. *Ingeniería y gestión de la confiabilidad operacional en plantas industriales*, (1st edn). Ril editores: Santiago, 2009.
5. Crespo Marquez A. *The maintenance management framework: models and methods for complex systems maintenance*. Springer-Verlag: London Limited, 2007. ISBN: 9781846288203.
6. Nelson W. Hazard Plotting For Incomplete Failure Data. *Journal of Quality Technology* 1969; **1**:27–52.
7. Rausand M, Hoyland A. *System Reliability Theory: Models, Statistical Methods, and Applications*. Wiley-Interscience, 2004; 644p.
8. Yañez M, Joglar F, Modarres M. Generalized Renewal Process for analysis of Repairable Systems with limited failure experience. *Reliability Engineering and System Safety* 2002; **77**:167–180.
9. Andréasson N. Optimization of opportunistic replacement activities in deterministic and stochastic multi-component systems. Licentiate thesis, Chalmers University of Technology and Göteborg University, Göteborg, Department of Mathematical Sciences, 2004. ISSN 0347–2809.

Authors' biographies

Luis Barberá Martínez is researcher in the Department of Industrial Management, School of Engineering at the University of Seville. Currently, he is PhD student, focusing on modelling e-maintenance policies for the improvement of production systems dependability and eco-efficiency. He has done research stays at foreign Universities, such as: Technical University Federico Santa María (Chile), Université Henri Poincaré (France), Politecnico di Milano (Italy), University of Toronto (Canada) or École Polytechnique Federale de Lausanne, EPFL (Switzerland). In addition, he works in different projects with industrial companies within the department. He is Mining Engineer (Energy Resources, 2003/2008) and he studied at Huelva, Barcelona and Sevilla. He has won three consecutive awards for Academic Engineering Performance in Spain by AMIC (2005, 2006, 2007), he received a honor diploma as a "Ten Competences Student by the University of Huelva and CEPSA Company (2007) and he graduated as number one of his class. He has three Master's degrees: Master of Industrial Organization and Management (2010) (School of Engineering, University of Seville), Master of Economy (2009) (University of Seville) and Master of Prevention Risk Work (2006). He is author or co-author of different book, book chapters and papers at national and international level concerning mainly industrial plant engineering, maintenance management and energy resources.

Adolfo Crespo Márquez is currently Full Professor at the School of Engineering of the University of Seville, in the Department of Industrial Management. He holds a PhD in Industrial Engineering from this same University. His research works have been published in journals such as the International Journal of Production Research, International Journal of Production Economics, European Journal of Operations Research, Omega, Decision Support Systems, Computers in Industry, Reliability Engineering and System Safety or Quality and Reliability Engineering, among others. Prof. Crespo is the author of 5 books, the last three with Springer-Verlag in 2007, 2010 and 2012, about maintenance and supply chain management. Prof. Crespo leads the Spanish Research Network on Dependability Management and the Spanish Committee for Maintenance Standardization (1995–2003). He also leads a research team related to maintenance and dependability management currently with 5 PhD students and 4 researchers. He has extensively participated in many engineering and consulting projects for different companies, for the Spanish Departments of Defense, Science and Education as well as for the European Commission (IPTS). He is the President of INGEMAN (a National Association for the Development of Maintenance Engineering in Spain) since 2002.

Pablo Viveros Gunckel Researcher and Academic at the Technical University Federico Santa María, Chile. He has been active in national and international research, both for important journals and conferences. Also he has developed work in the Chilean industry. Consultant specialist in the area of Reliability, Asset Management and Evaluation of Engineering Projects. He is Industrial Engineer and Master in Asset Management and Maintenance of the Technical University Federico Santa Maria.

Adolfo Arata Andreani is Professor at The Pontificia Universidad Católica of Valparaíso and Director of The Development Center Management. He has been professor and researcher at several Universities in Chile and abroad, achieving high office as Rector and Dean of Engineering at the Technical University Federico Santa Maria. He has been an international consultant for large companies. He has authored over 200 publications and 13 books, and has also received several awards. Mechanical Engineer, Diploma in Industrial Engineering, PhD in Business Studies.

Copyright © 2012 John Wiley & Sons, Ltd.