Name: _____ Date: _____ Period: _____

All Inheritance Patterns Worksheet

Be sure to use a pencil only…NO PENS!

1) Cystic fibrosis is an autosomal recessive disorder. A male that is healthy meets a woman that is a carrier of cystic fibrosis. They have two children, a boy and a girl. The boy is showing the early signs of having cystic fibrosis, but the girl appears to be healthy.

Complete the Punnett Square for the mother and father below

	H	h
H	HH	Hh
h	Hh	hh

Complete the pedigree for this family below.

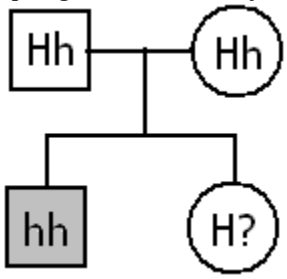

a. What was the probability that the son would inherit cystic fibrosis? **25%**

b. If they have another child, what are the odds that he/she will be healthy? **75%**

2) Huntington's disease is an **autosomal dominant disorder**. Bob and Charlene are both healthy, even though Charlene's mother suffered from Huntington's disease. Charlene's father was healthy. Bob and Charlene decide to try and have a child after discussing their situation with a genetic counselor. They finally gave birth to a baby girl.

Complete the Punnett Square for Bob & Charlene below

	h	h
h	hh	hh
h	hh	hh

Complete the pedigree for this family below.

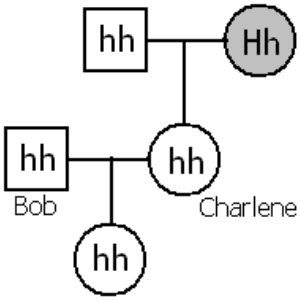

a. What is the probability that their child will inherit Huntington's disease? **0%**

b. What was the probability of Charlene having Huntington's disease? **50%**

3) Suppose that you are an explorer who has found a new species of plant. Some of the plants have red flowers and some have yellow flowers. You decide to cross a red flowered plant with a yellow flowered plant and find that all the offspring have orange flowers.

a. What type of inheritance does this indicate? **Incomplete dominance**

b. Prove your answer with a Punnett Square.

4) Carnation flowers follow the pattern of incomplete dominance. How could one create all three colors of carnations at a time (red, pink, white)? Prove your answer with a Punnett Square.

a. What is the phenotype of each parent? **Pink**

What is the probability of getting:

b. White flowers? **25%**

c. Homozygous dominant flowers? **50%**

d. Heterozygous flowers? **50%**

e. Homozygous recessive flowers? **0%**

5) Colorblindness is a sex-linked recessive disorder. Jim and Connie recently gave birth to a son named Jerry. Jim is colorblind as is Connie's mother. Connie's father has normal vision.
Complete the Punnett Square for Jim & Connie below

	X^H	X^h
X^h	$X^H X^h$	$X^h X^h$
Y	$X^H Y$	$X^h Y$

Complete the pedigree for this family below.

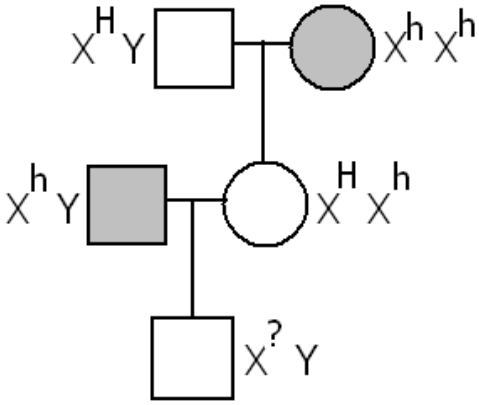

a. Does Jerry have colorblindness? **Unknown**

6) Human blood type A and B follows codominance rules. Robert has codominant blood and Audrey has the same blood type as her mother, who has heterozygous B blood. Robert and Audrey had two boys, Clint and Jordan.
Complete the Punnett Square for Robert & Audrey below

	A	B
B	AB	BB
o	Ao	Bo

Complete the pedigree for this family below.

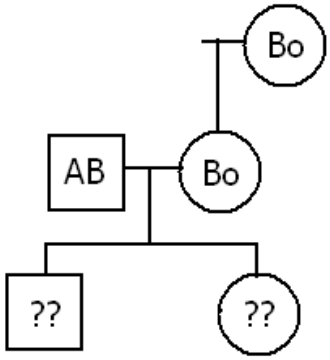

a. What is the probability that Clint has: A blood? **25%** B Blood? **50%**

AB blood? **25%** O blood? **0%**

b. What is the probability that BOTH Clint and Jordan will have type A blood? **¼ x ¼ = 1/16**